Montage instructies | Assembly intructions | Montageanleitungen| Intructions de montage

Maria

Inhoud | Contents | Inhalt | Contenu

Nr		Pcs
A	5,0 x 120mm	4
B	5,0 x 70mm	140
C	5,0 x 50mm	56
D	5,0 x 20mm	2
E	8,0 x 140mm	2
F	10,0 x 150mm	2
G		2
H		2

Nr		Pcs
I		2
J		2
K		4
L		6
M		2
N		5
O		1
P	4,0 x 35mm	4

Inhoud | Contents | Inhalt | Contenu

Nr		Pcs
1	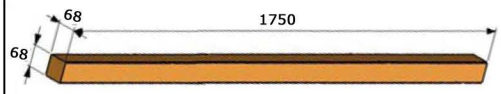	4
1a	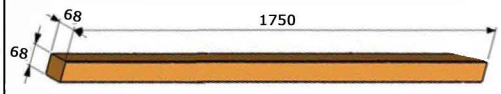	2
2a	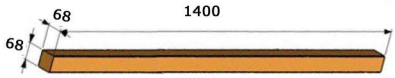	2
3a	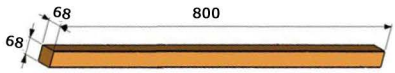	2
4a	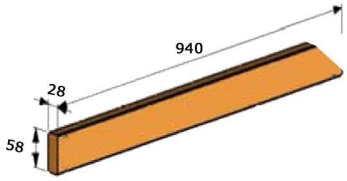	2
5a	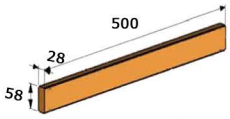	3
6	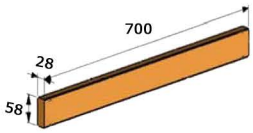	4
7	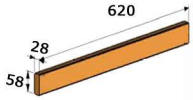	2

Nr		Pcs
8	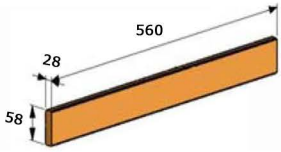	2
9	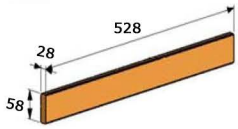	2
10	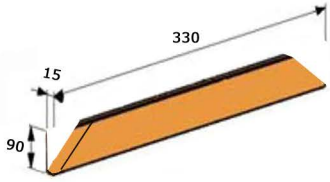	2
11	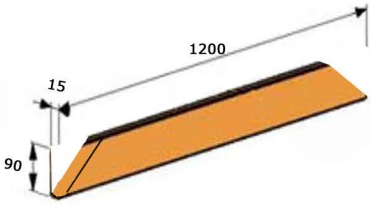	1
12	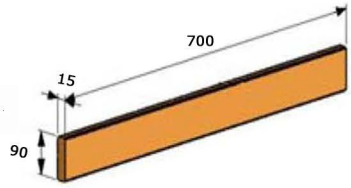	36

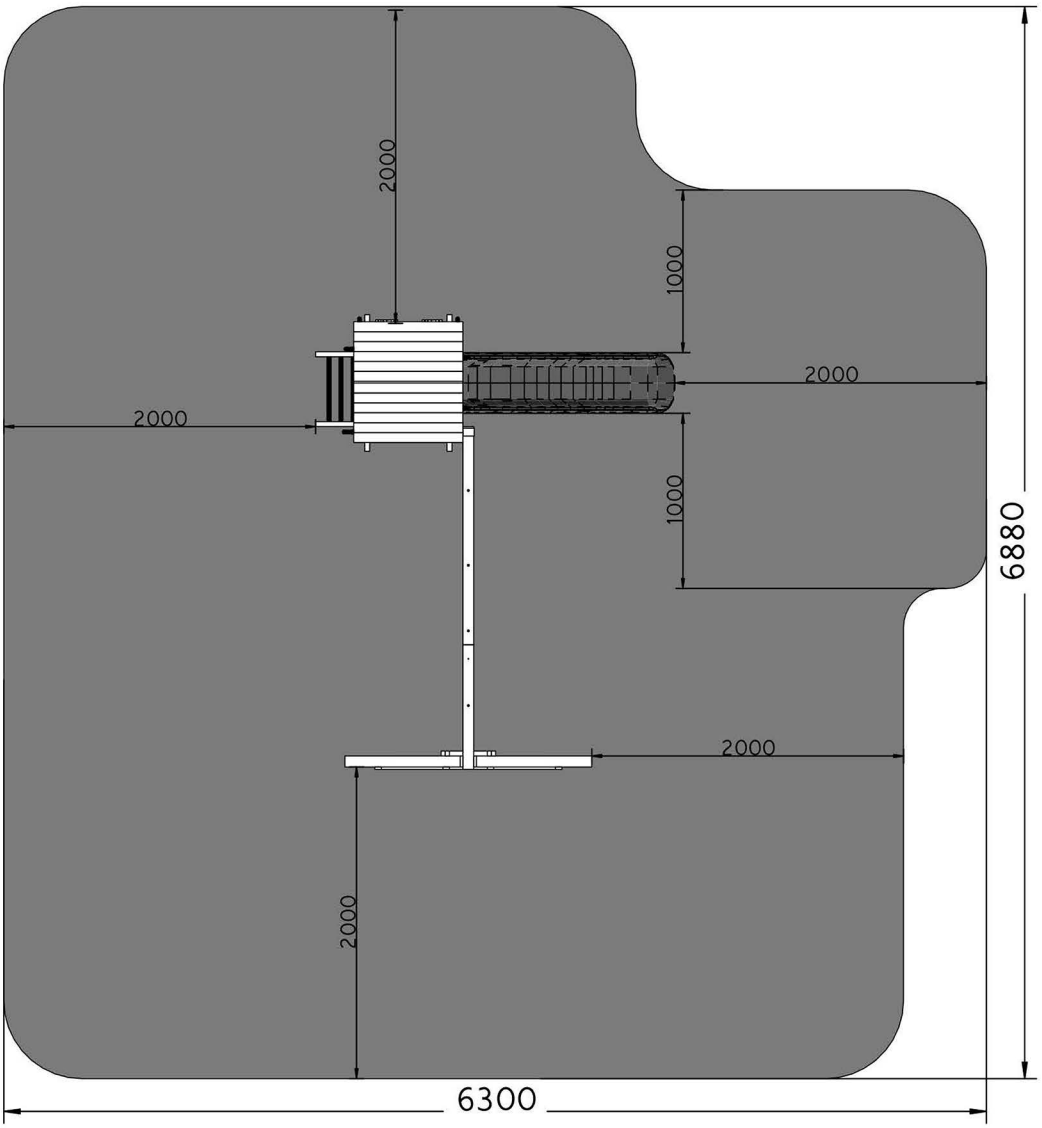
2000
1000
2000
2000
1000
6880
2000
2000
6300

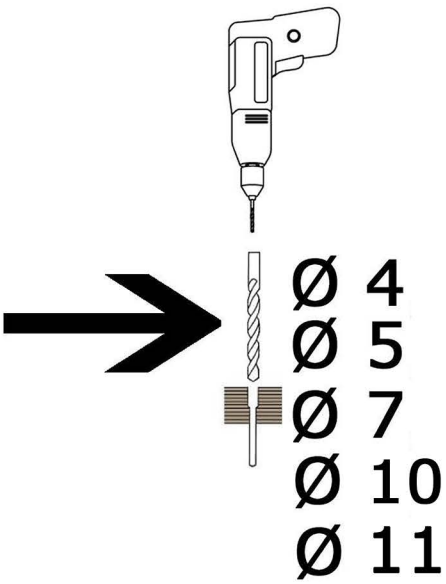
Ø 4
Ø 5
Ø 7
Ø 10
Ø 11

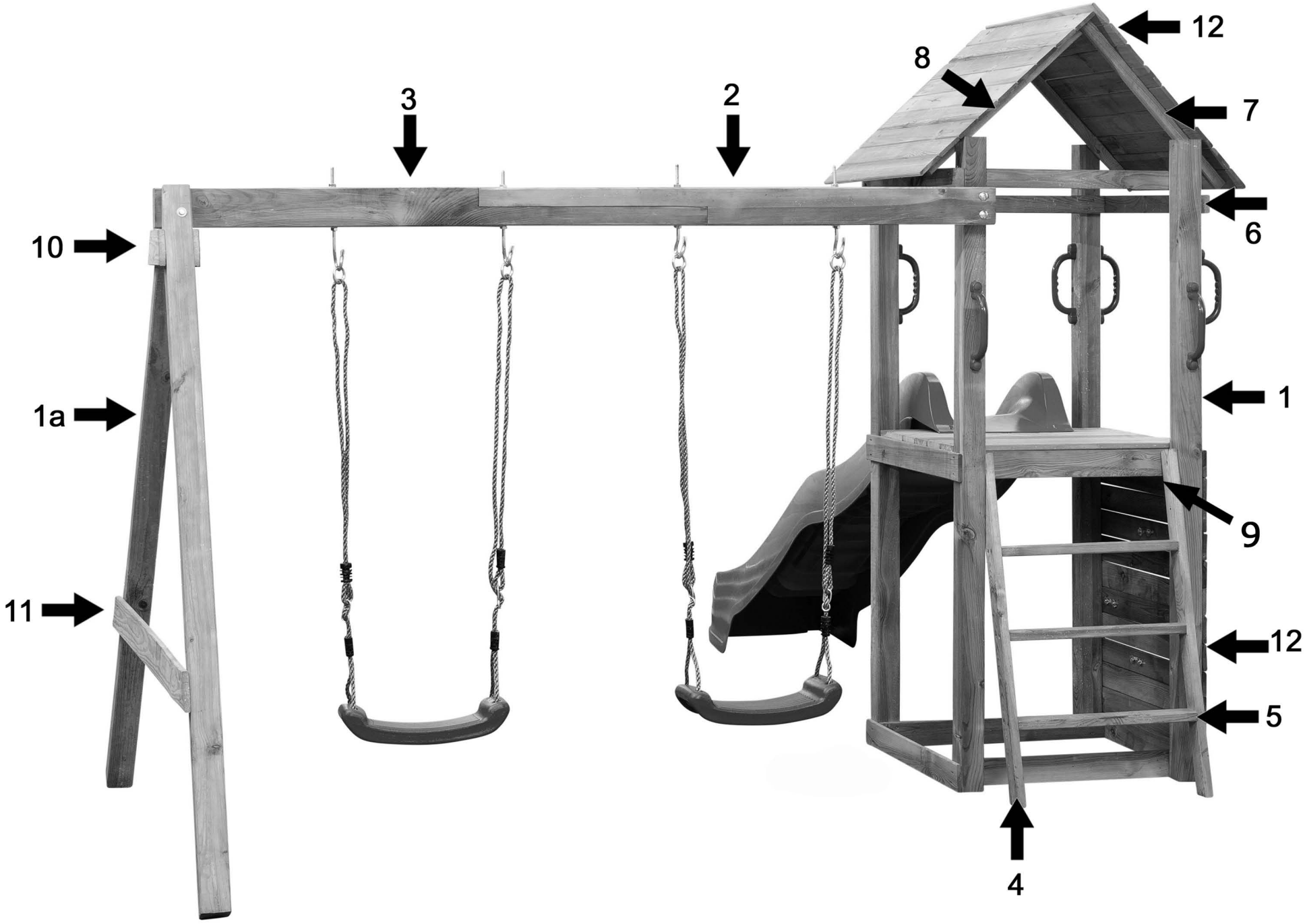
12
8
7
3
2
6
10
1
1a
9
11
12
5
4

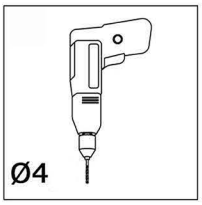

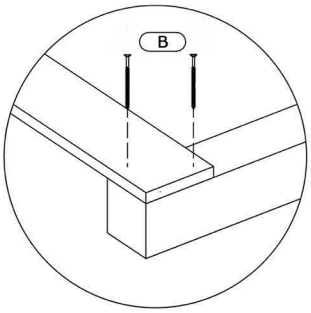

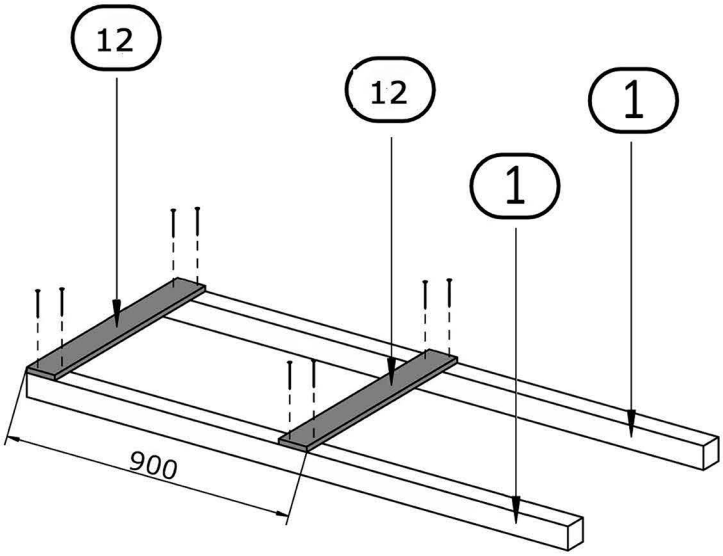

B x 8

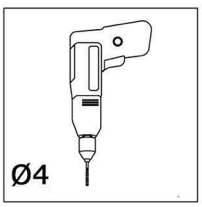

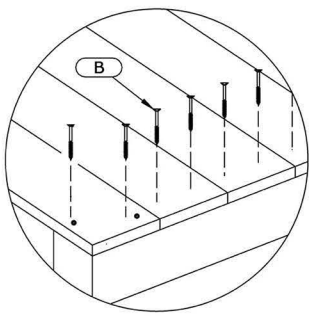

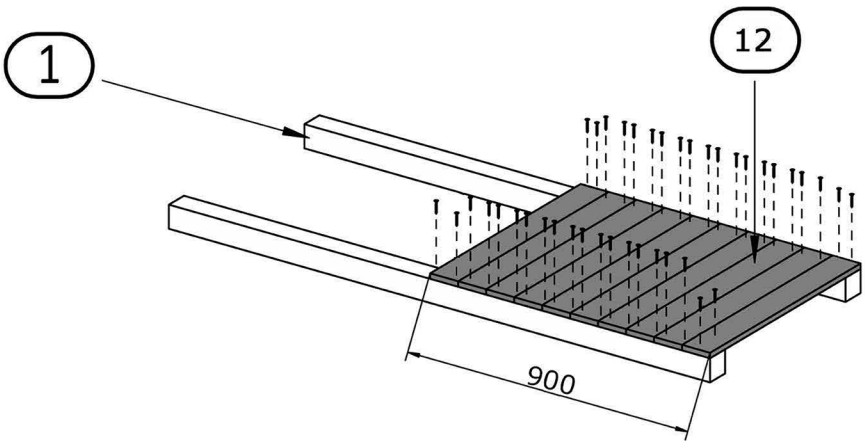

B x 40

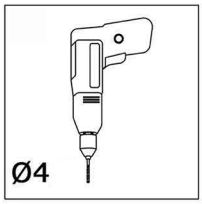

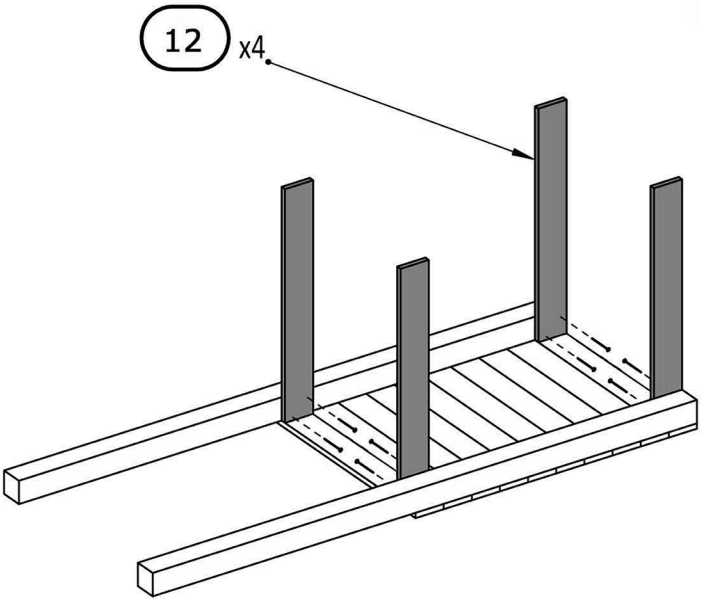

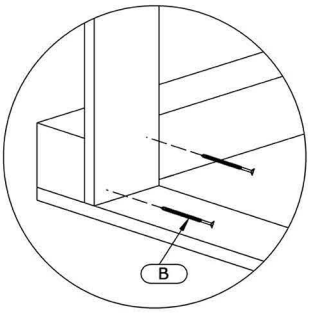

B x 8

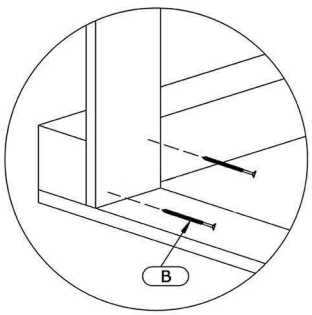

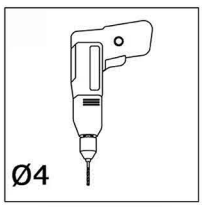

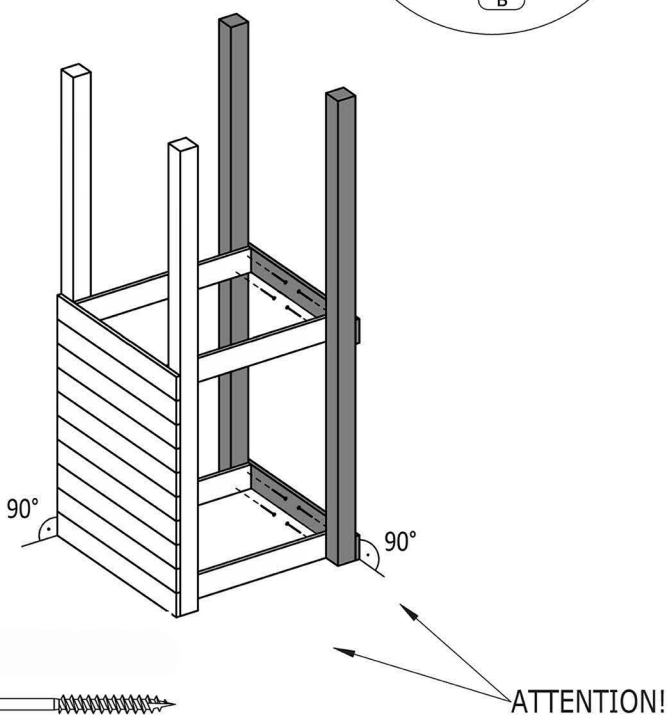

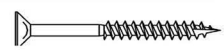

B x 8

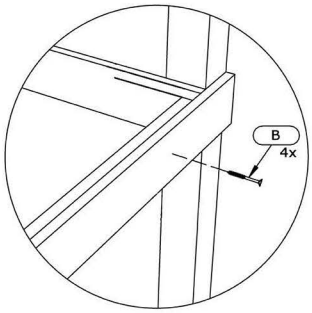

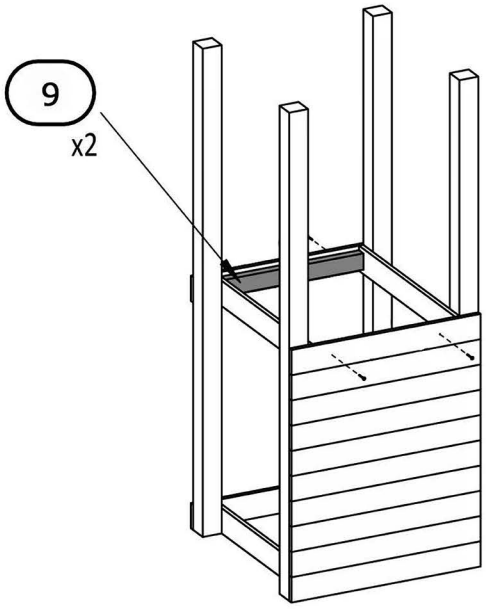

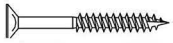

P x 4

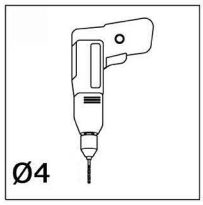

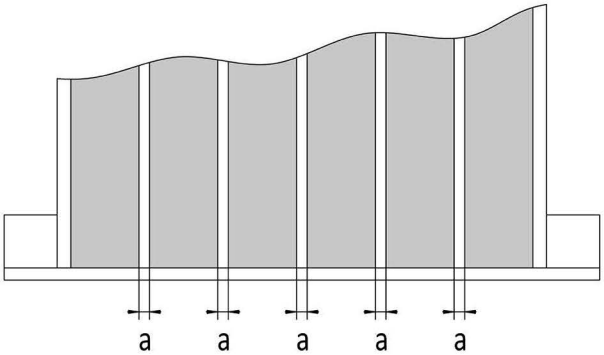

a = ±3,0 mm

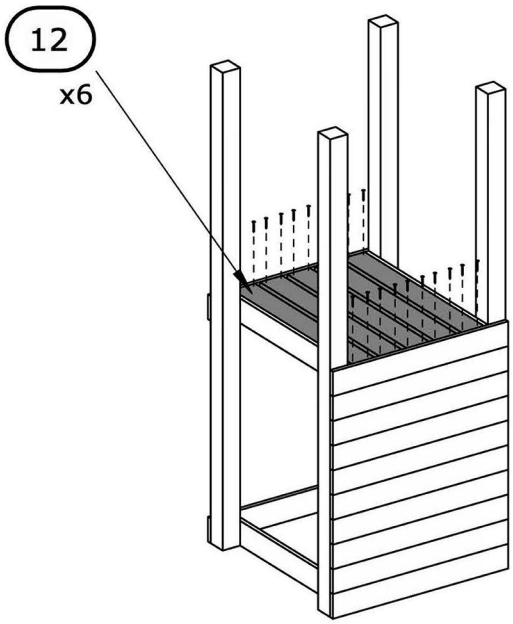

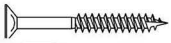

B x 24

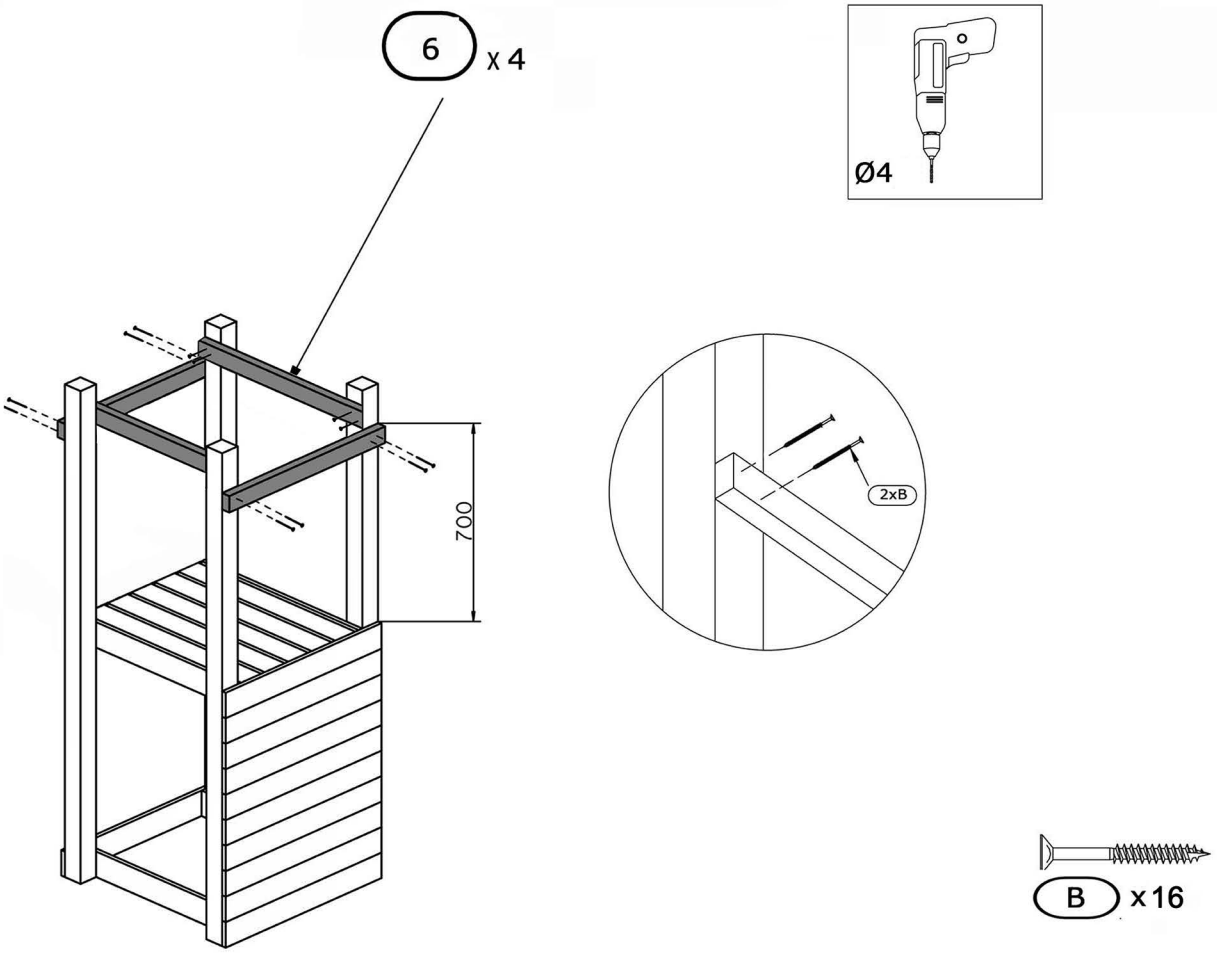
6
x 4
Ø4
700
2xB
B
x 16

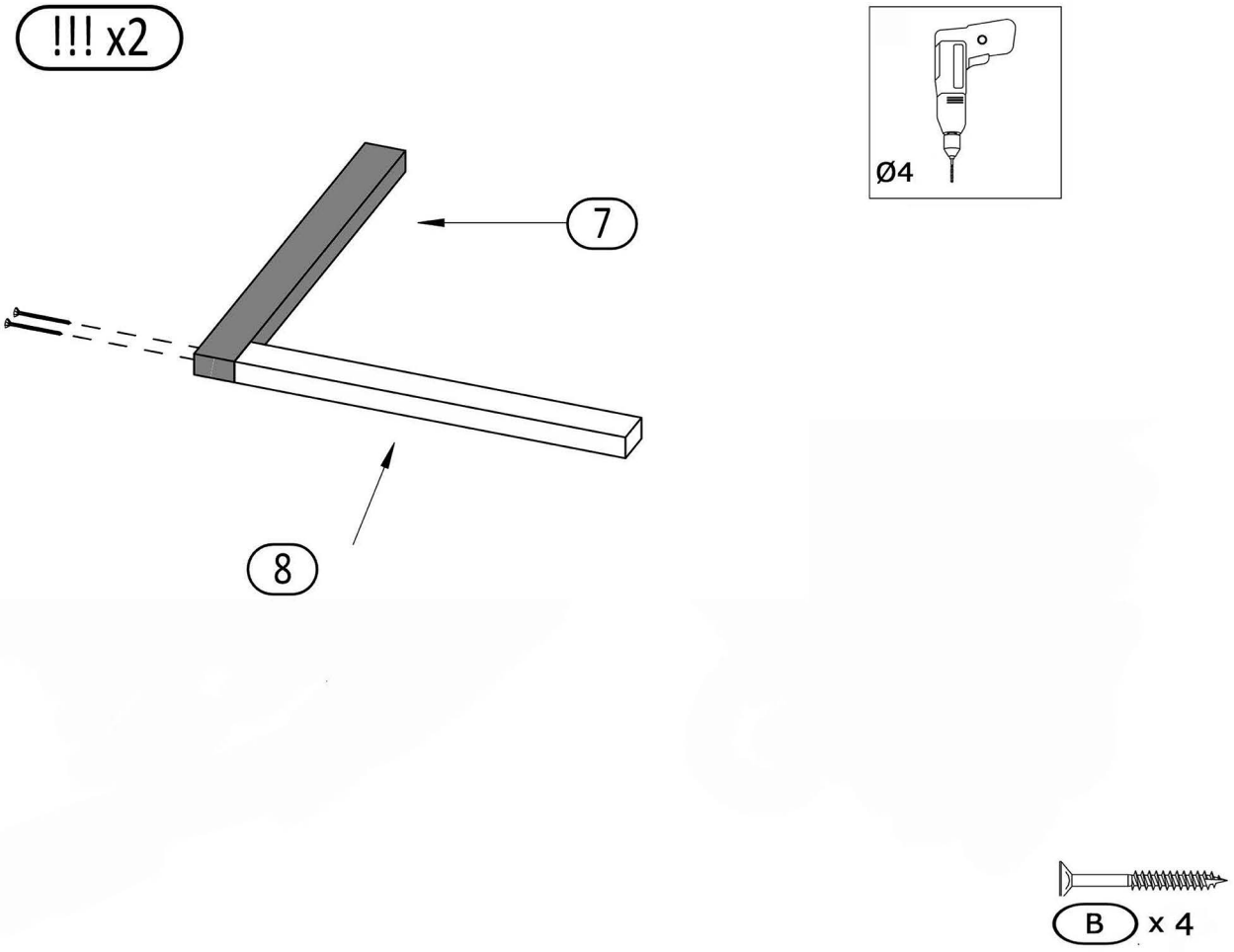
!!! x2
Ø4
7
8
B
x 4

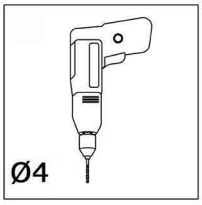

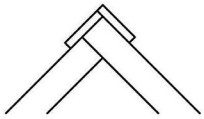

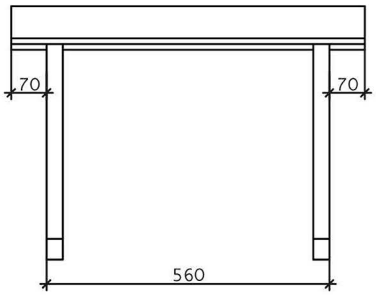

12

x2

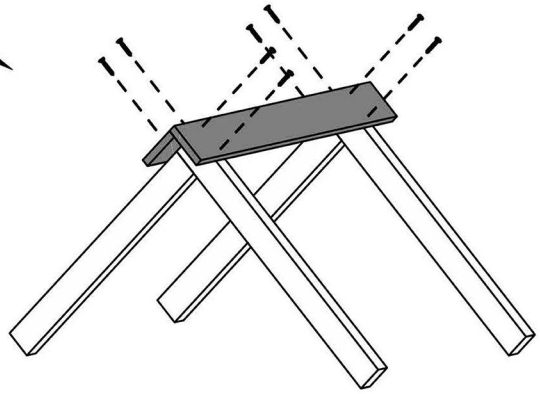

C x 8

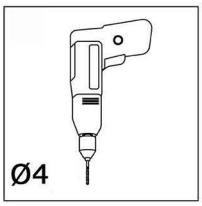

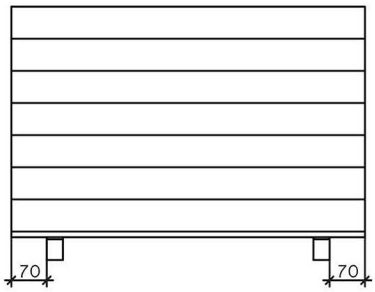

12

x12

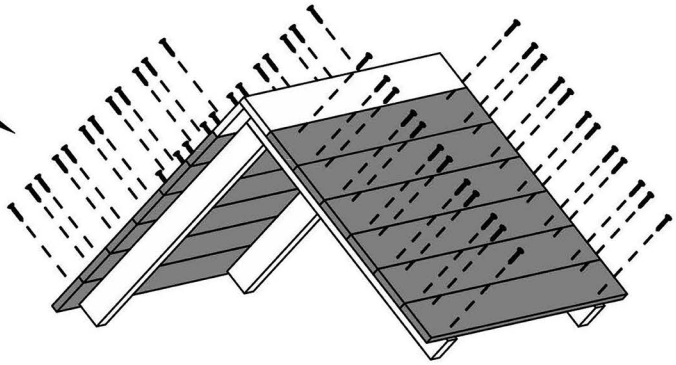

C x48

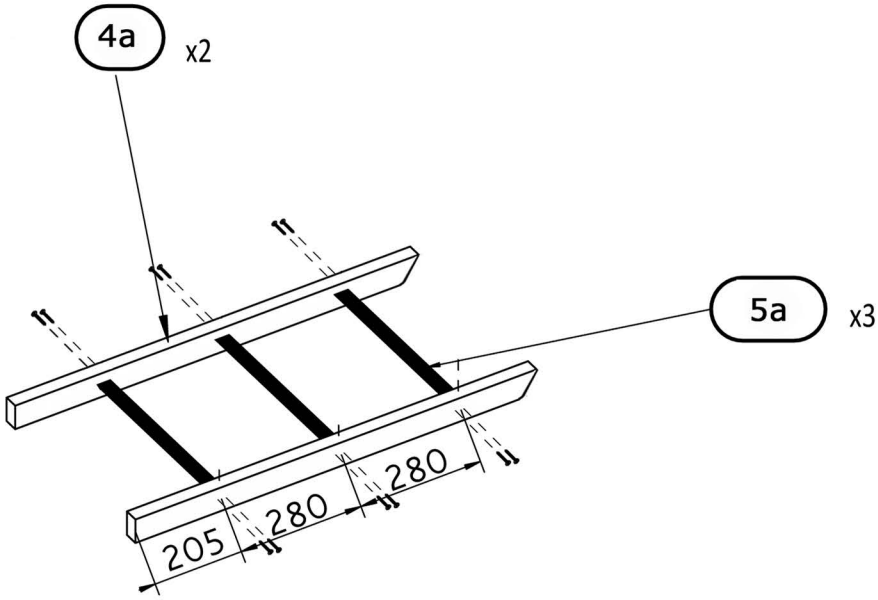
4a
x2
5a
x3
205
280
280

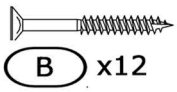
B
x12

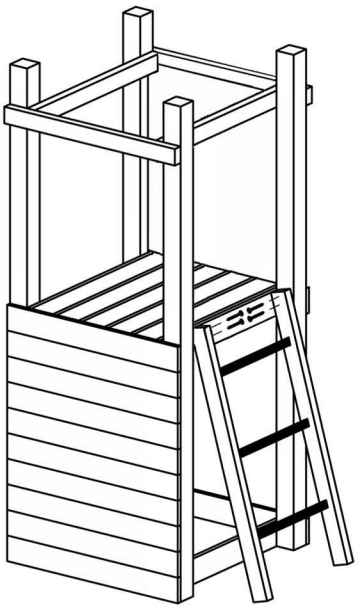

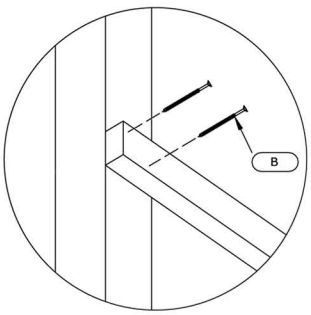
B

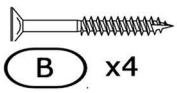
B
x4

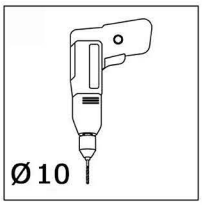

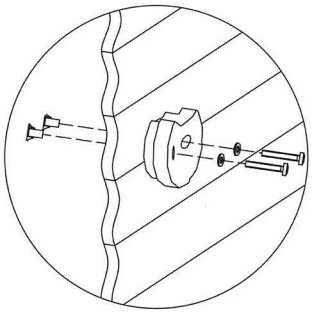

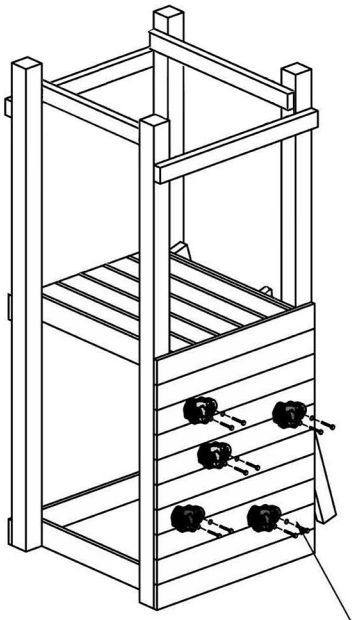

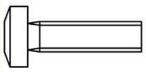

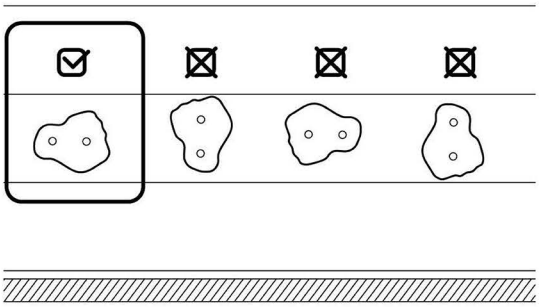

N x5

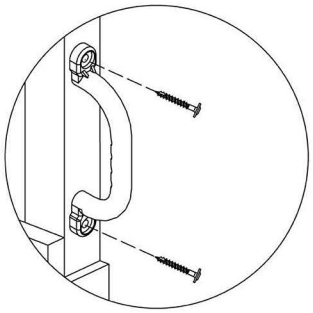

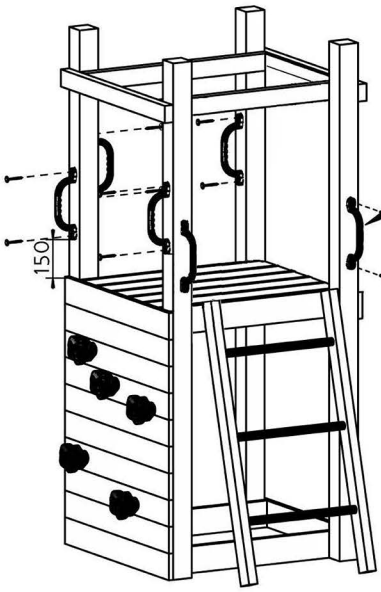

L x6

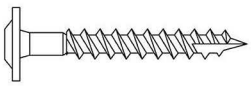

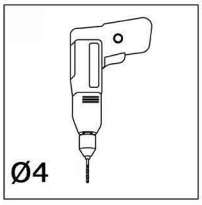

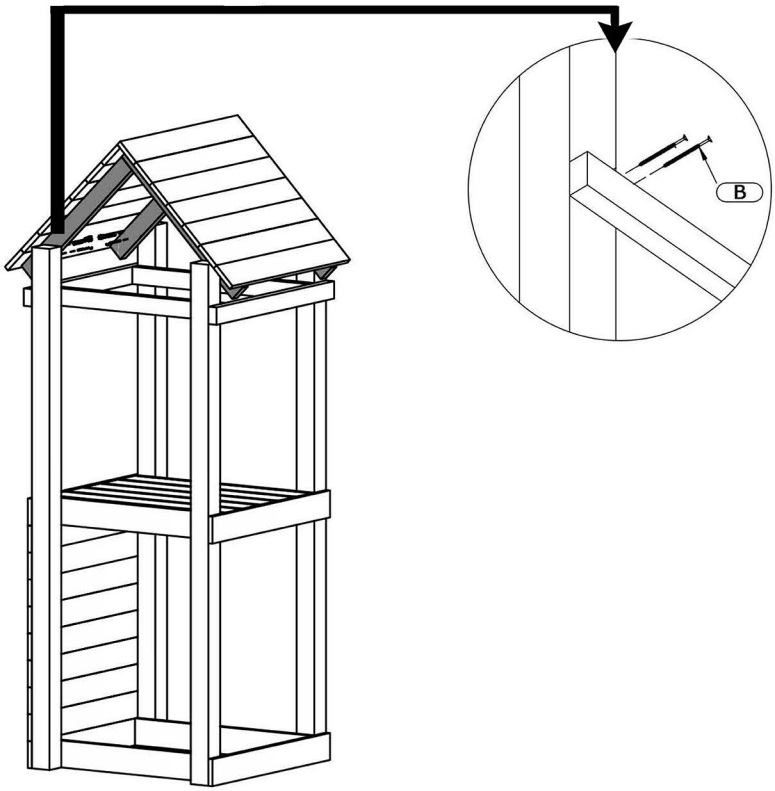

B x 8

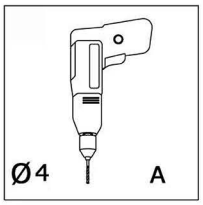

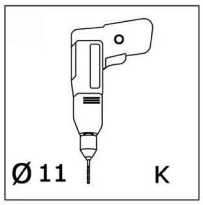

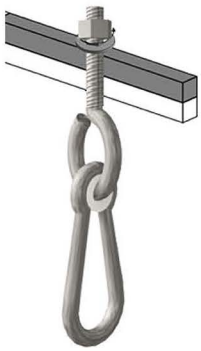

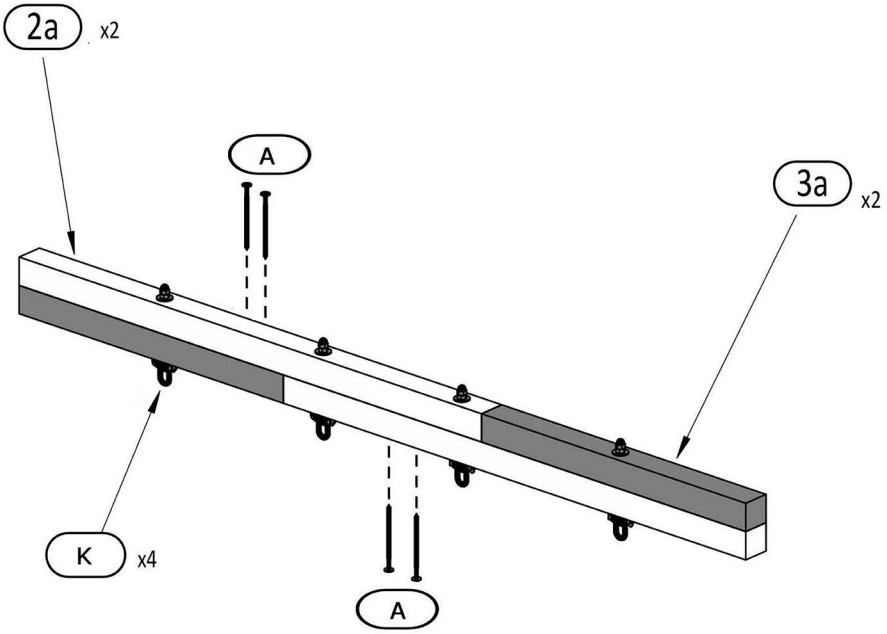

A x 4

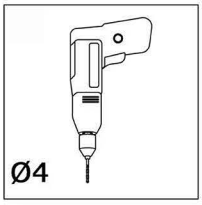

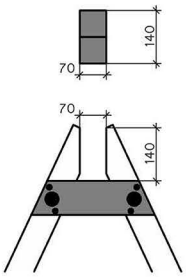

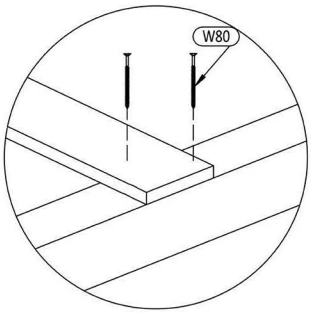

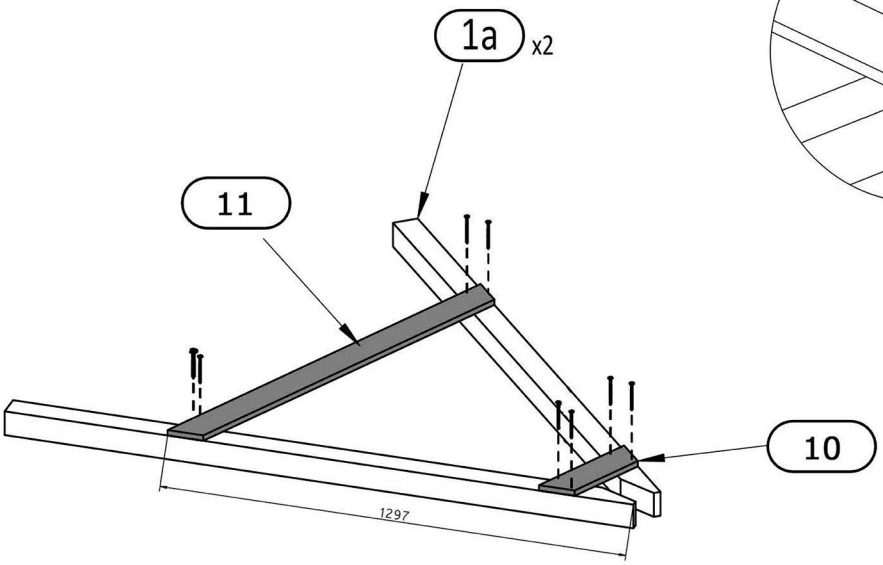

B x 8

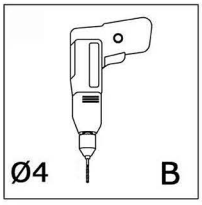

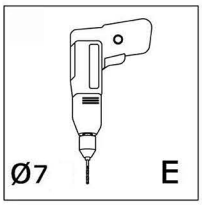

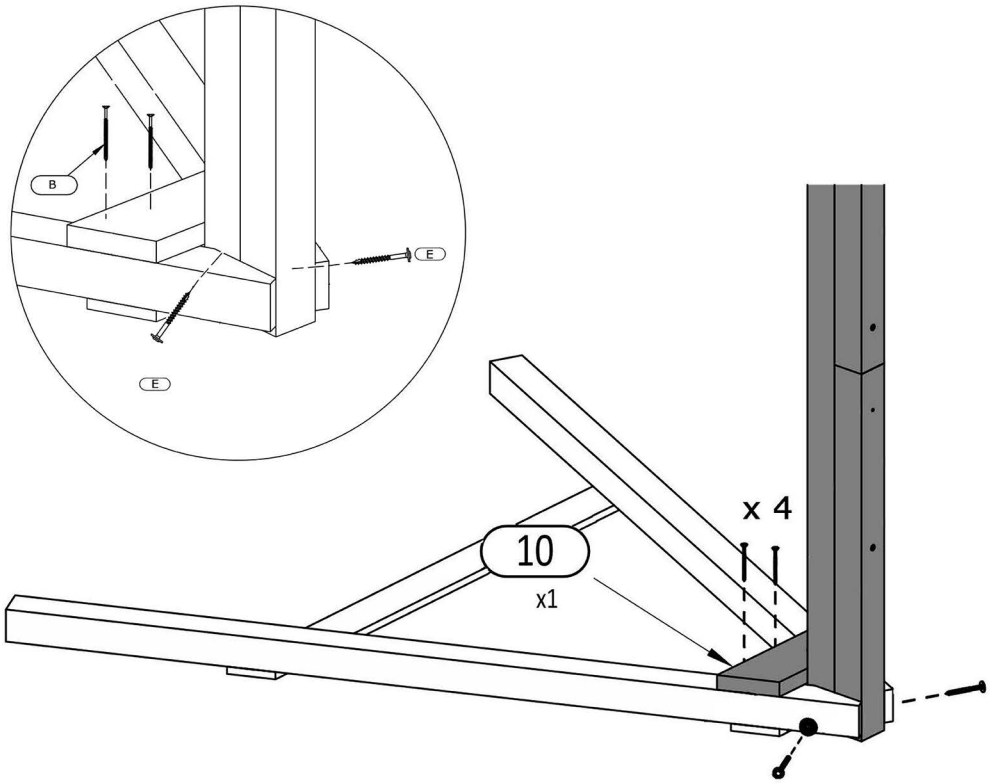

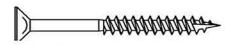

B x 4

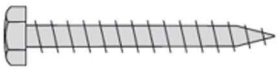

E x 2

H x 2

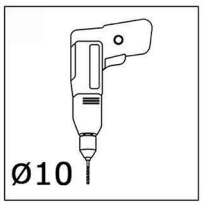

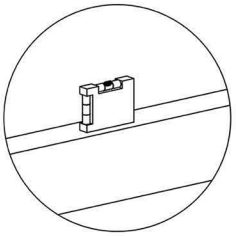

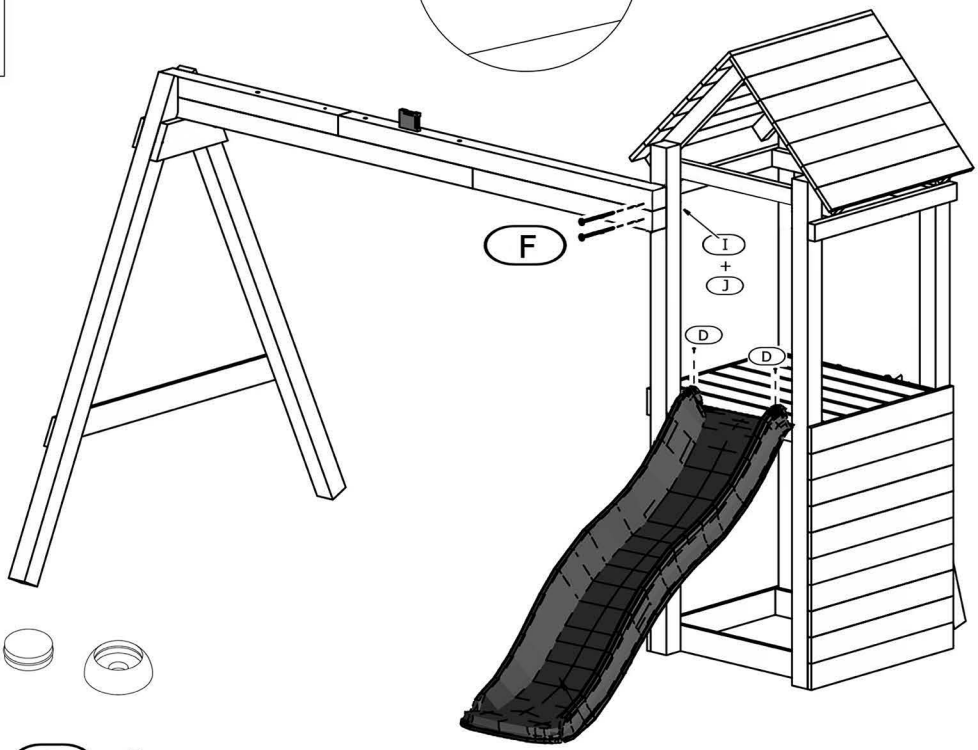

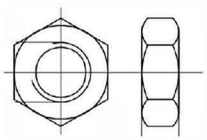

I x 2

J x 2

F x 2

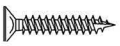
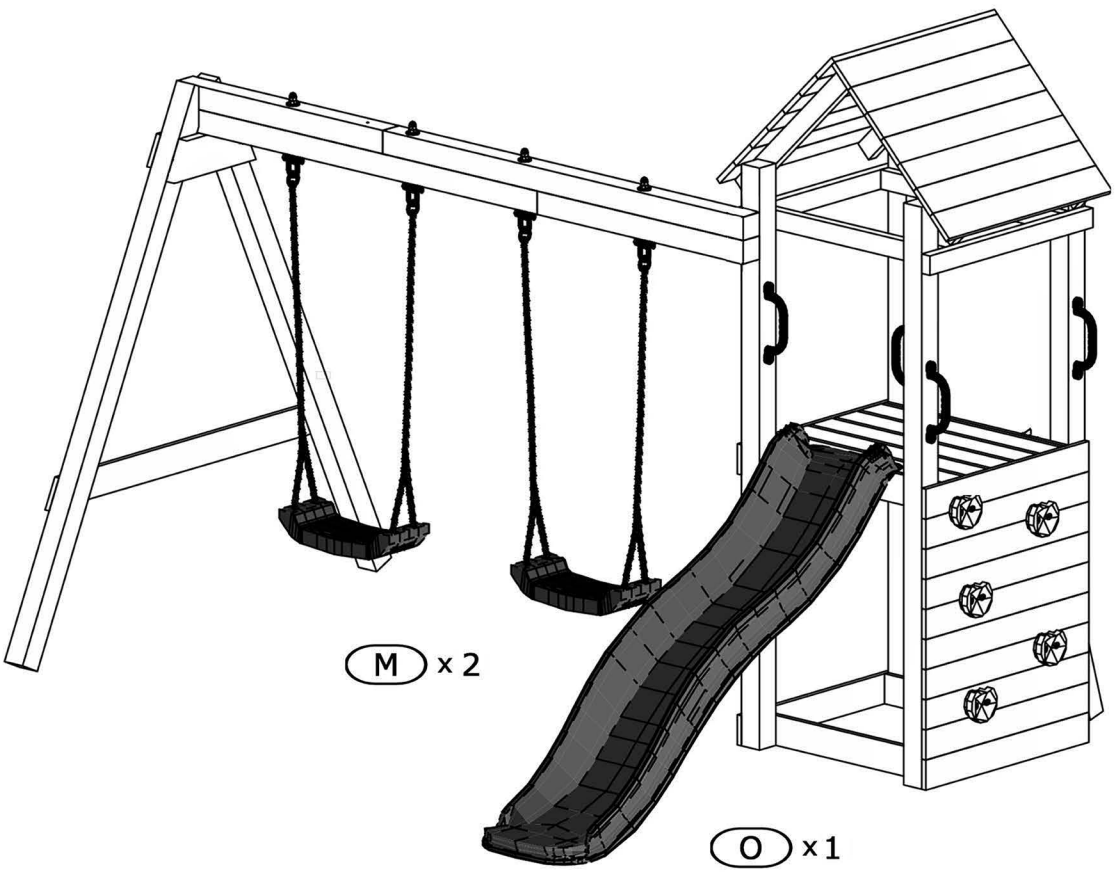
D x2