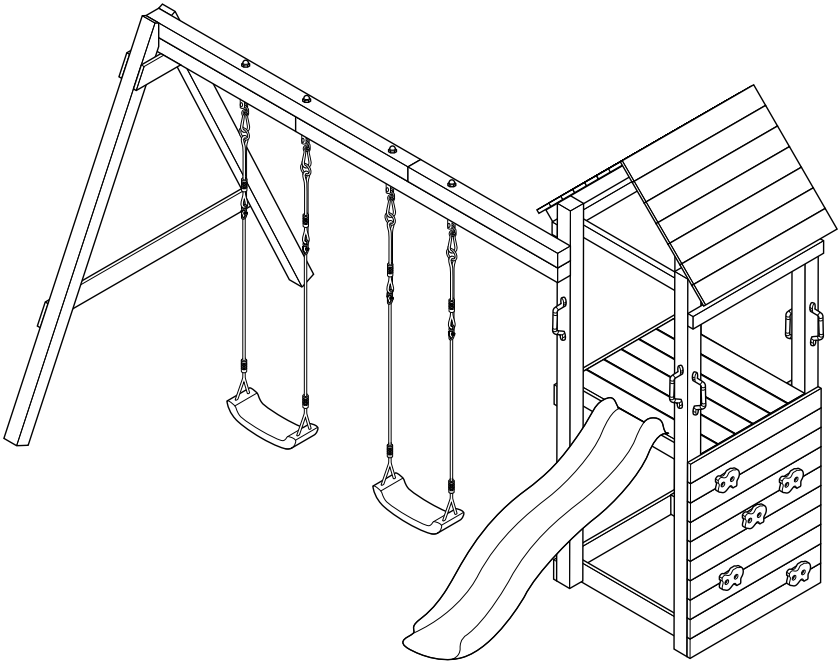

Maria

ART. NR. 7850048

TÜV NORD GS geprüfte Sicherheit

0-3

Swing King

Maria

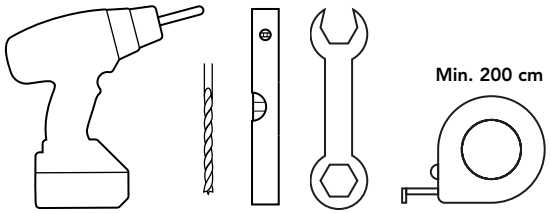

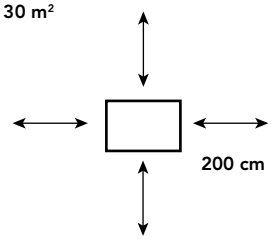

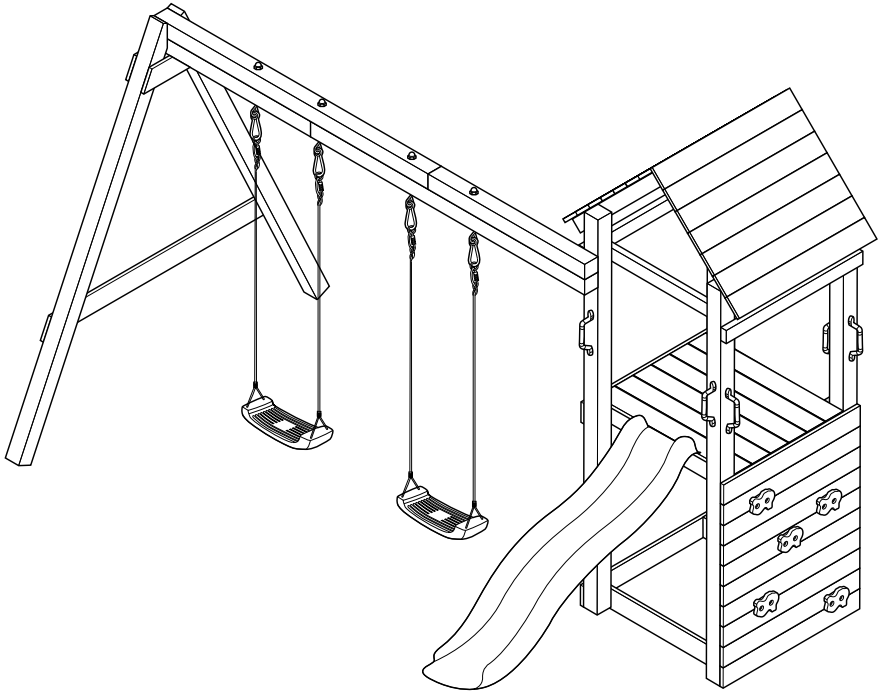

L= 231cm x B= 86,5cm x H= 175cm

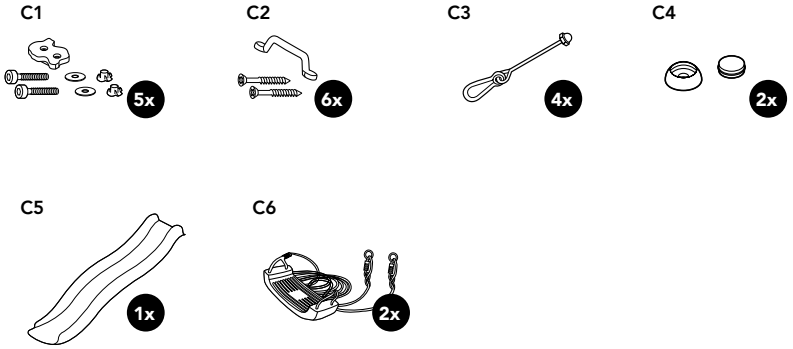

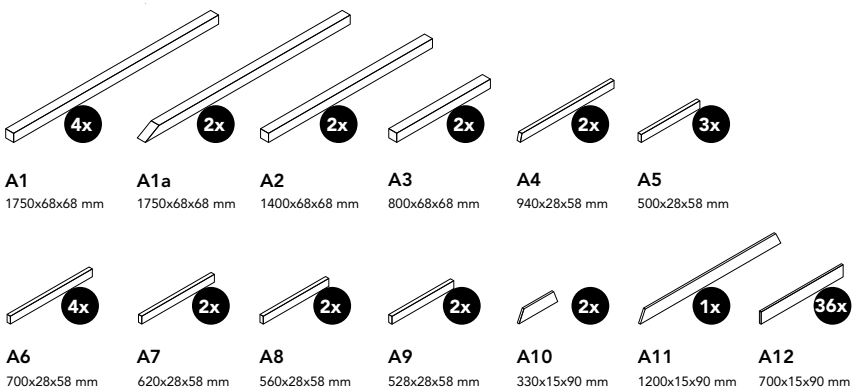

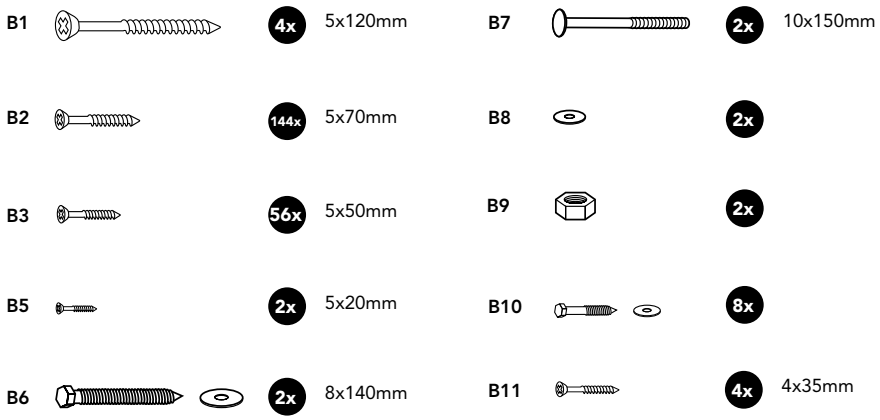

1

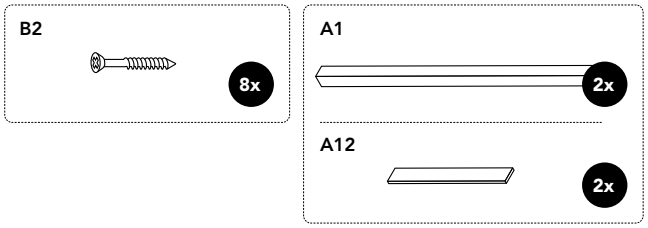

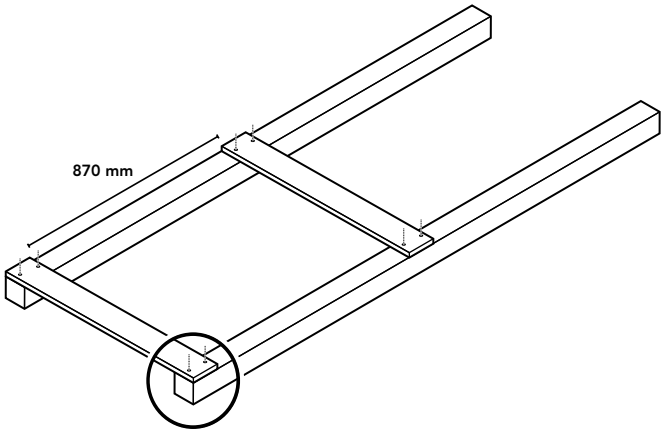

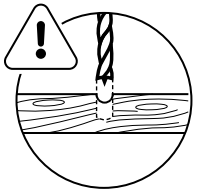

Ø 4 mm

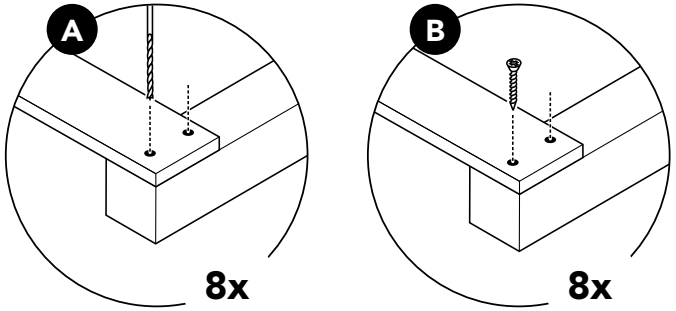

2

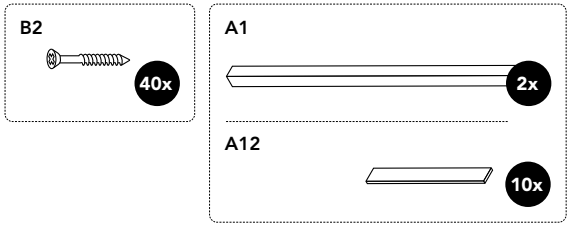

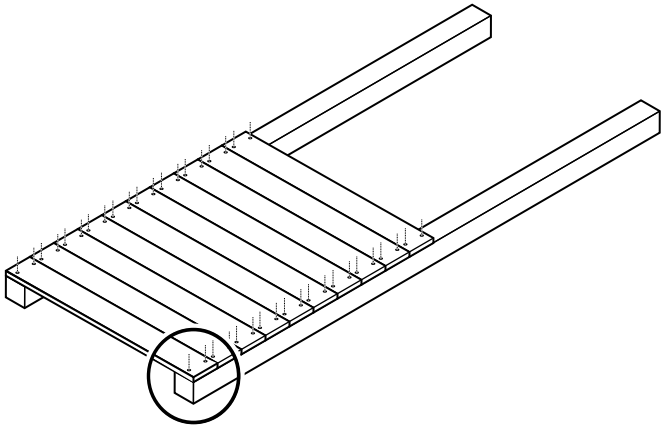

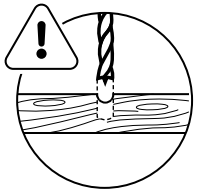

Ø 4 mm

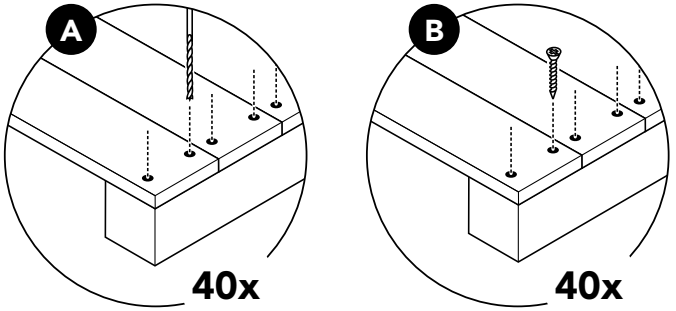

3

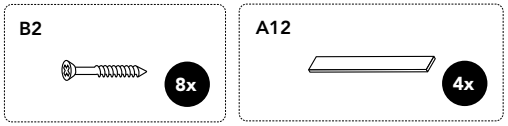

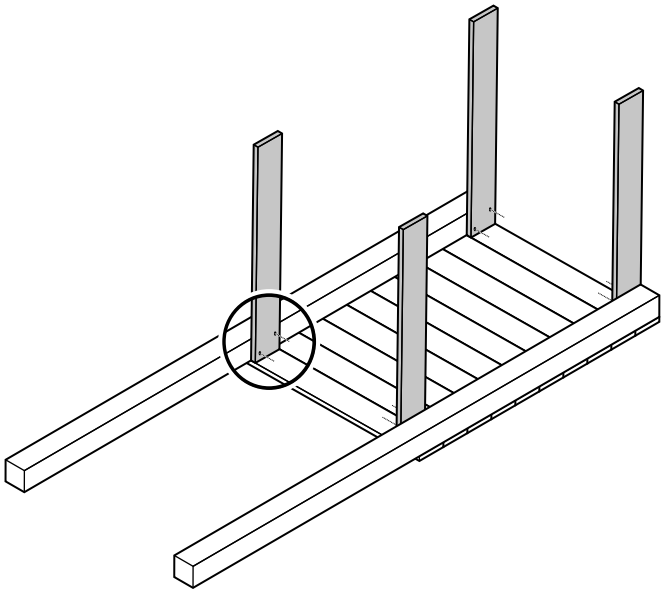

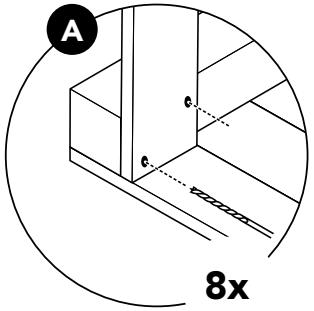

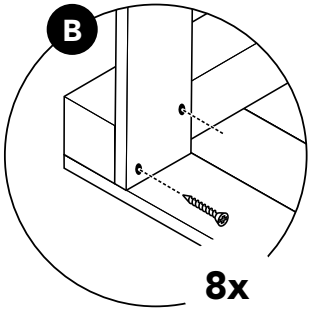

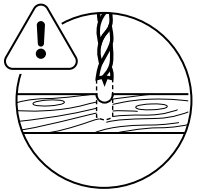

Ø 4 mm

4

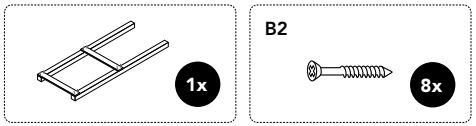

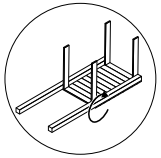

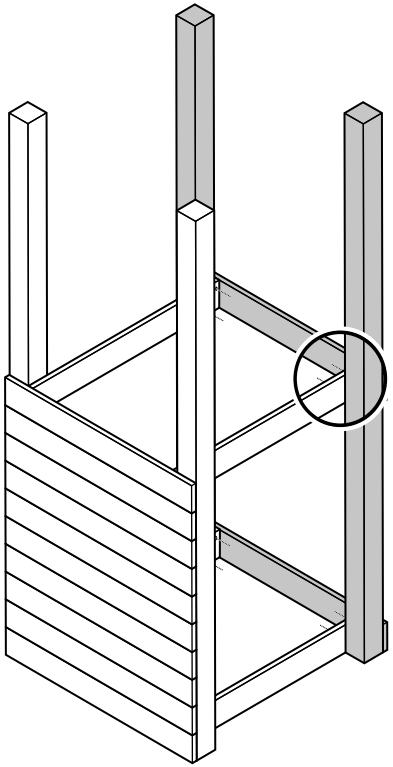

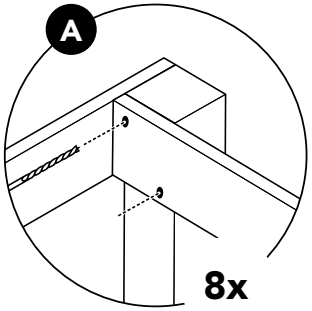

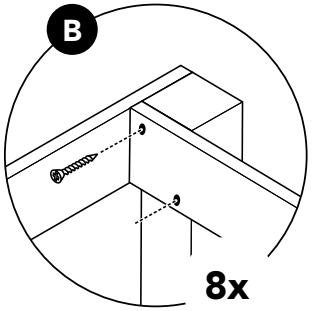

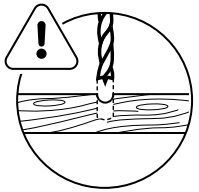

Ø 4 mm

5

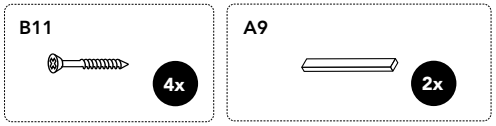

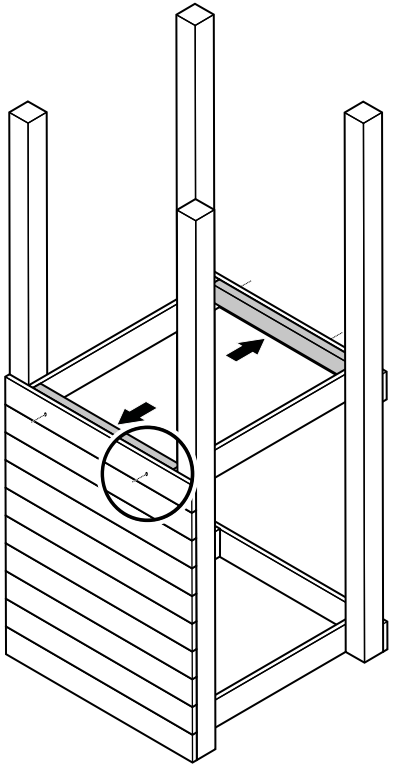

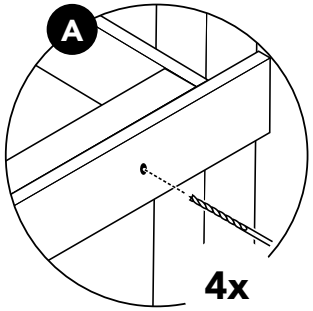

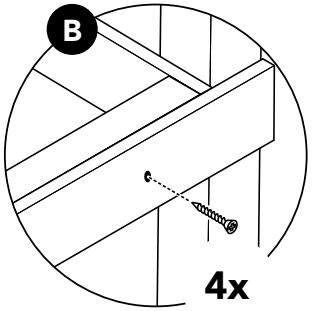

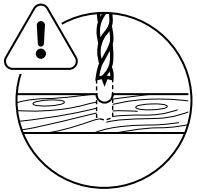

Ø 4 mm

6

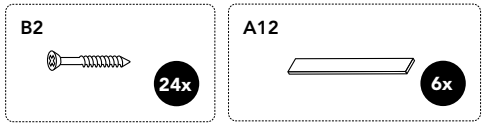

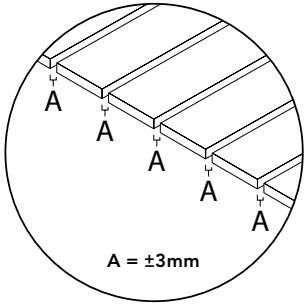

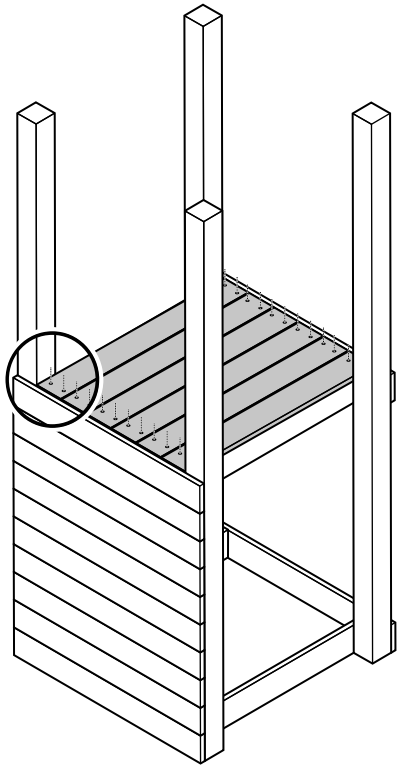

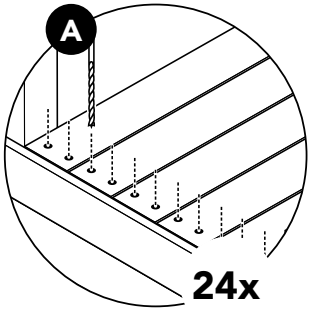

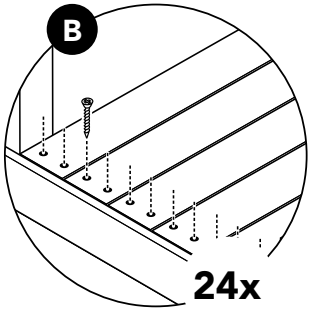

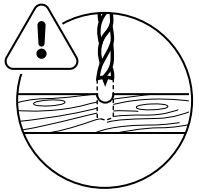

Ø 4 mm

7

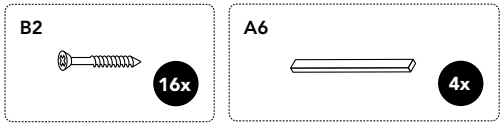
B2
16x
A6
4x

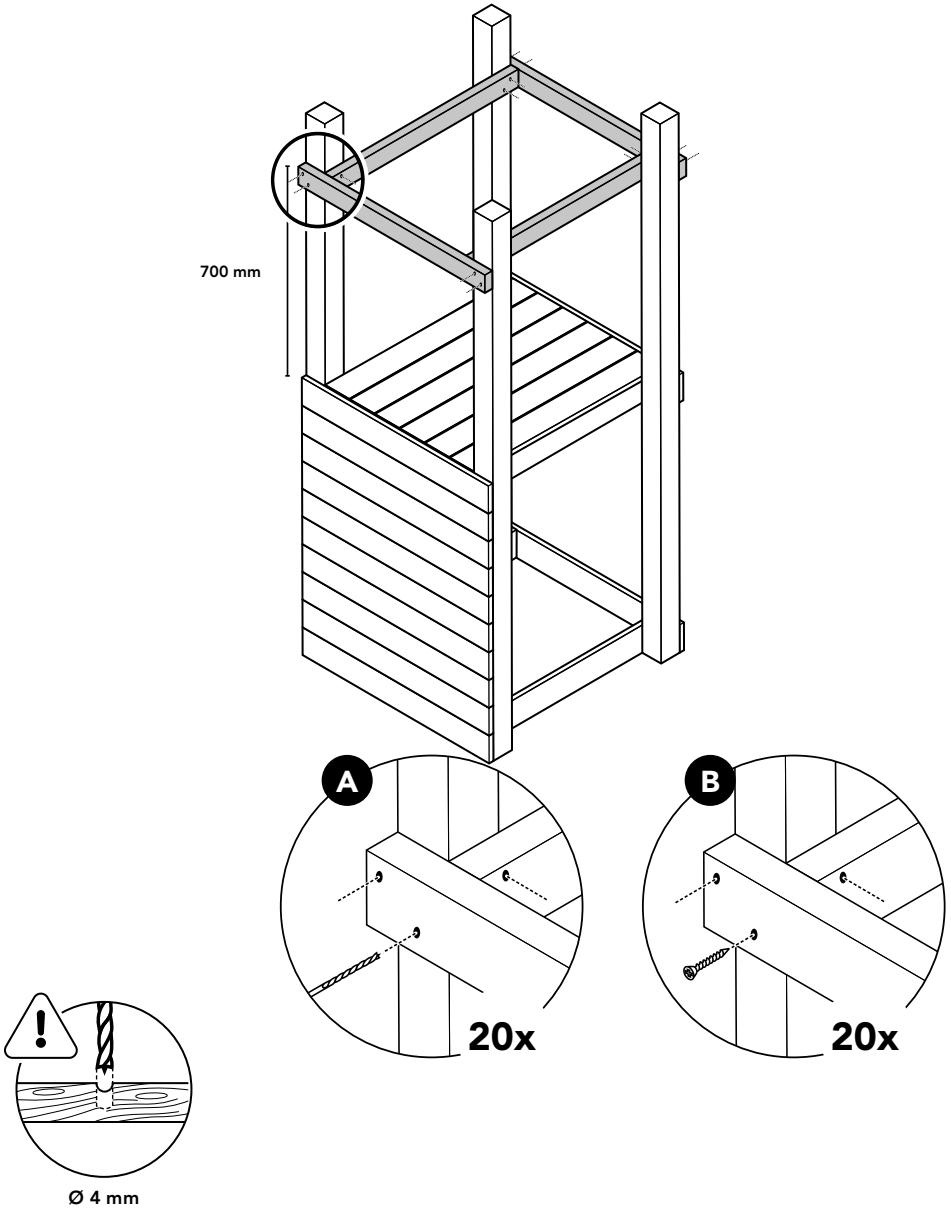
700 mm
A
20x
B
20x
Ø 4 mm

8

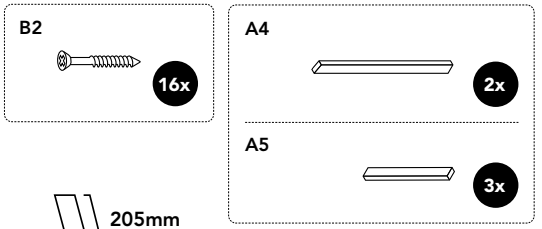
B2
16x
A4
2x
A5
3x

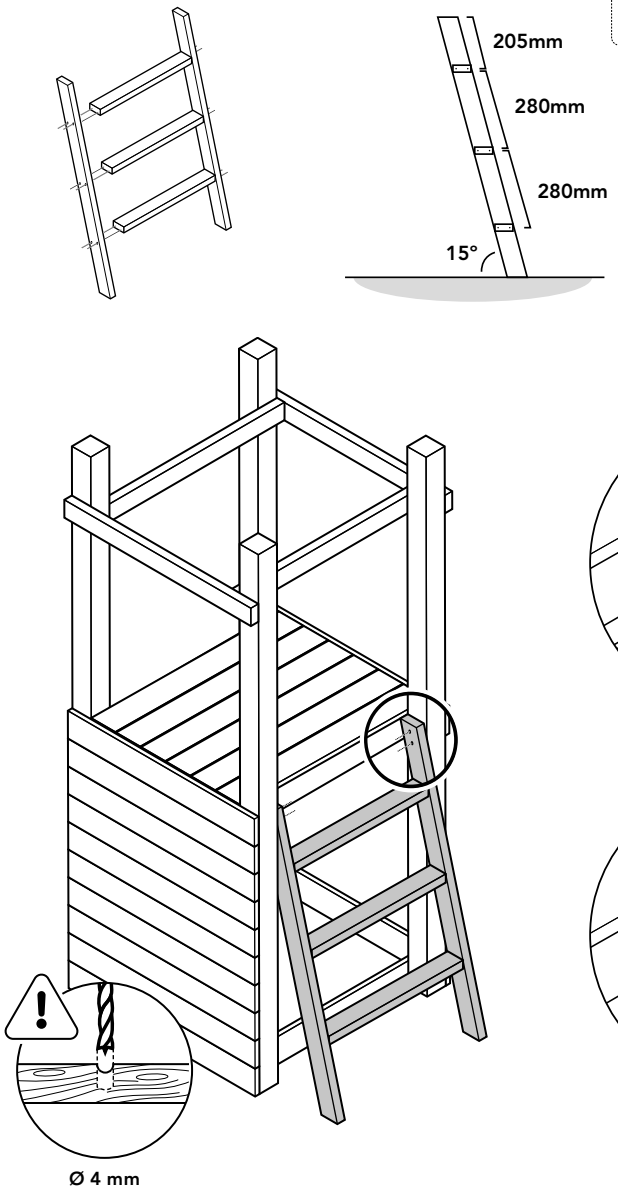
205mm
280mm
280mm
15°
A
16x
B
16x
Ø 4 mm

9

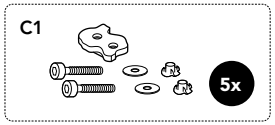

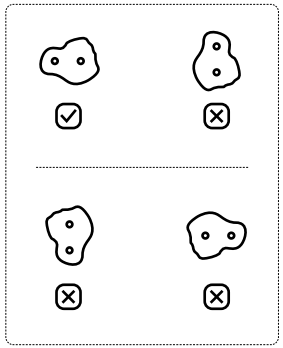

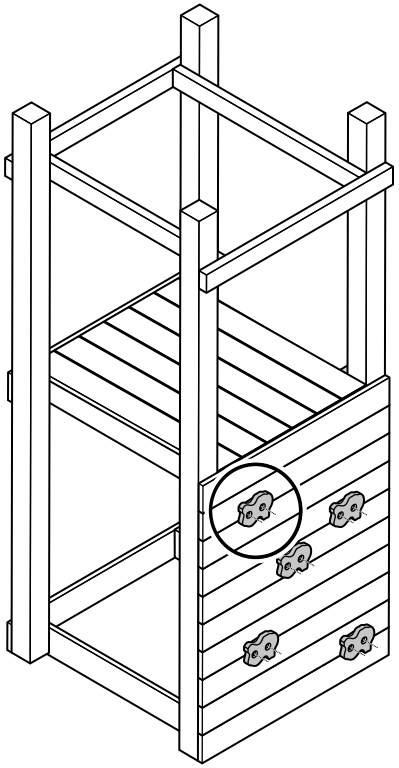

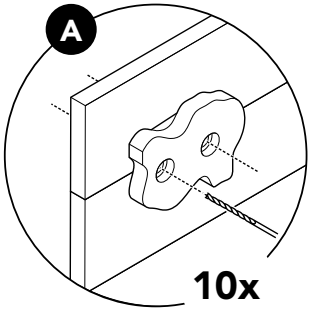

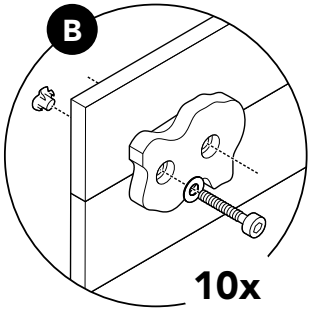

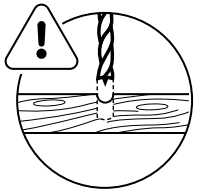

Ø 10 mm

10

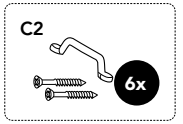

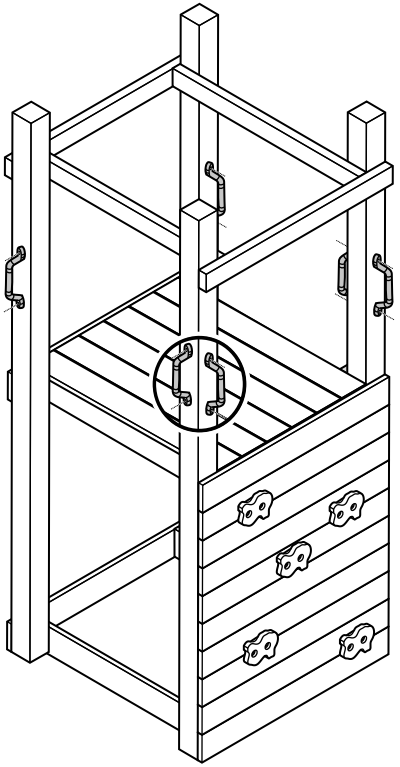

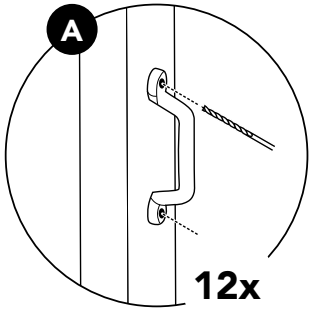

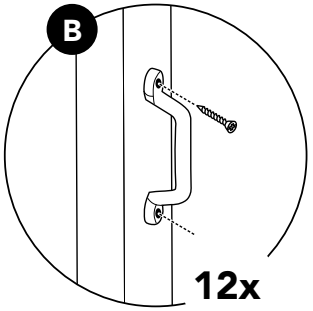

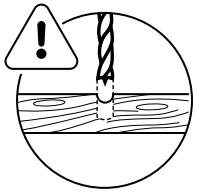

Ø 4 mm

11

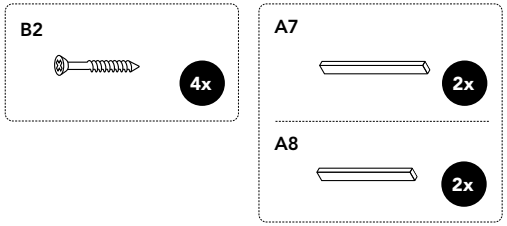

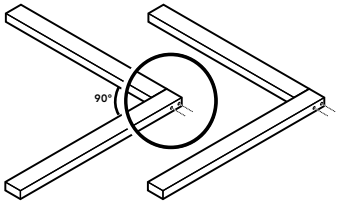

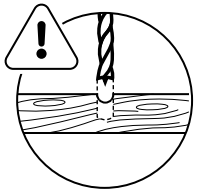

Ø 4 mm

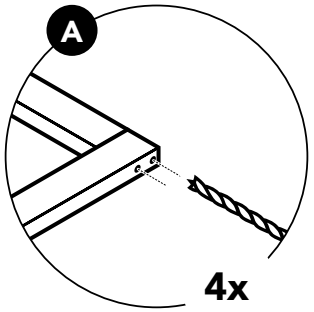

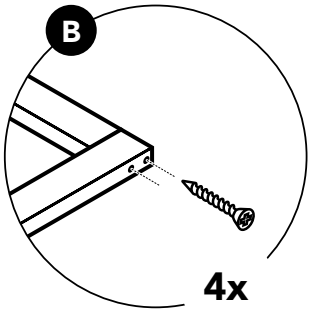

12

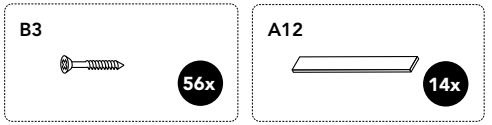

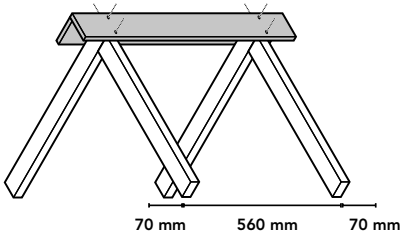

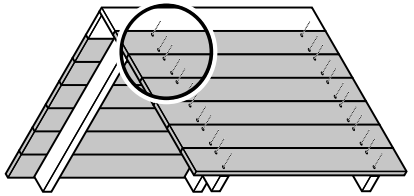

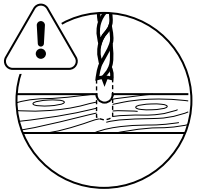

Ø 4 mm

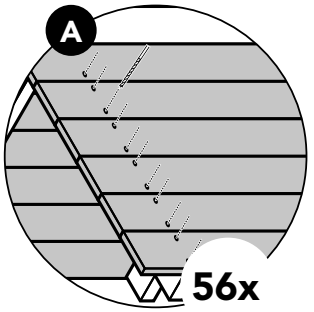

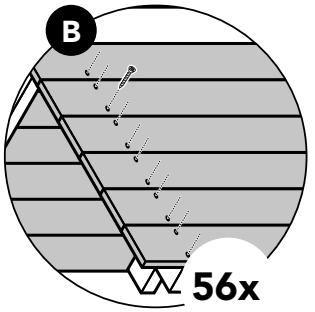

13

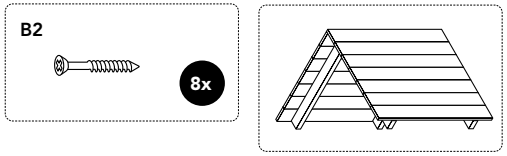

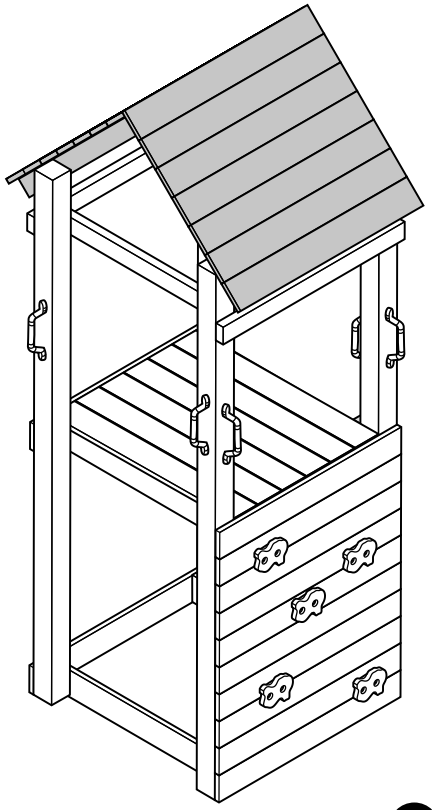

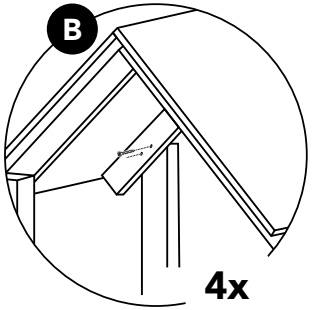

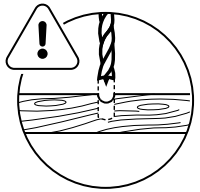

Ø 4 mm

14

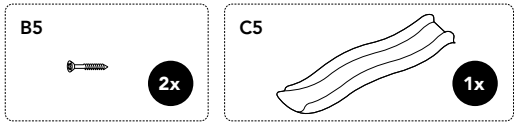

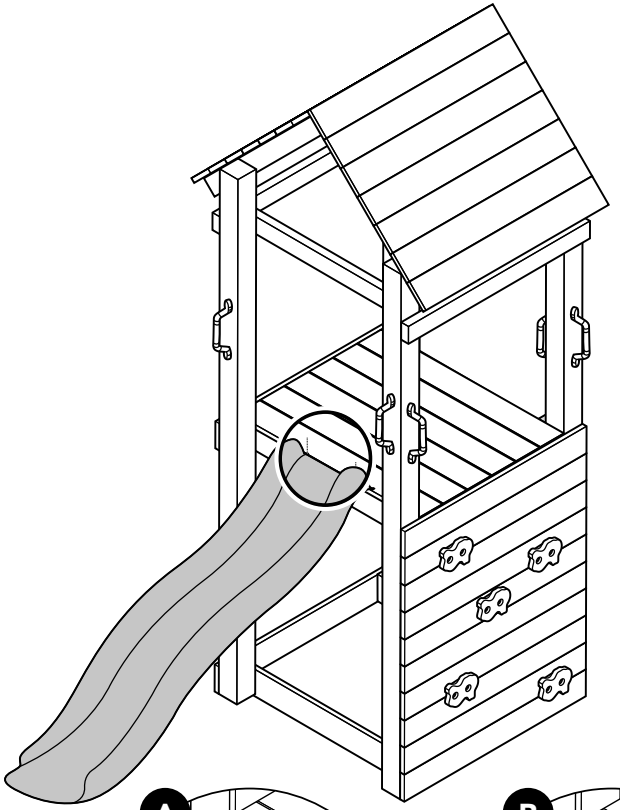

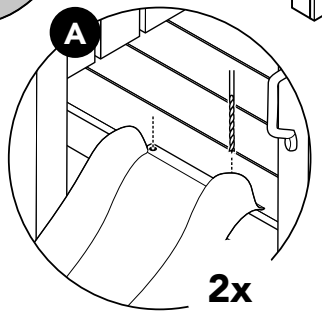

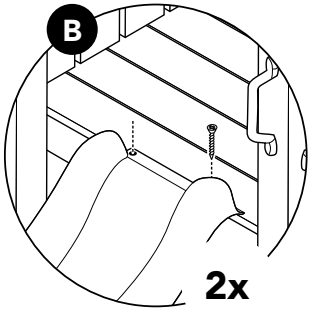

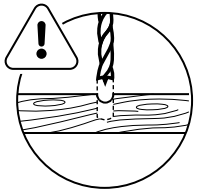

Ø 4 mm

15

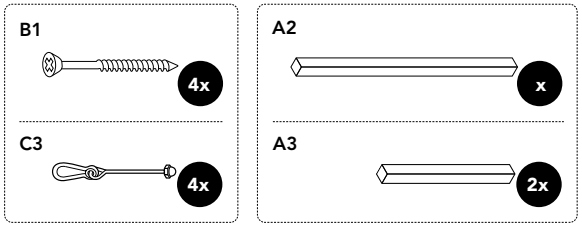

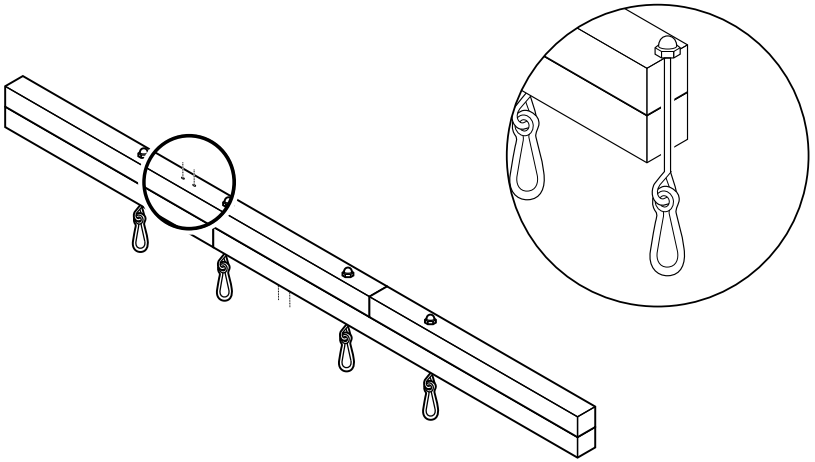

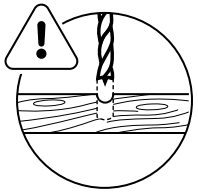

Ø 4 mm

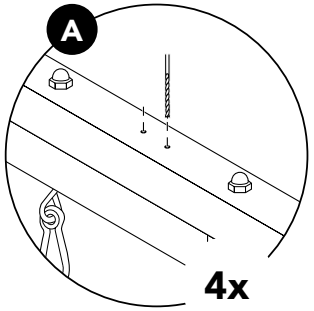

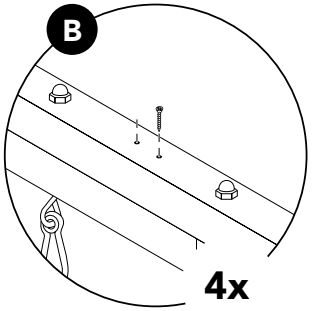

16

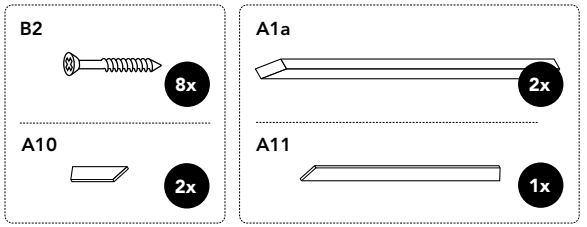

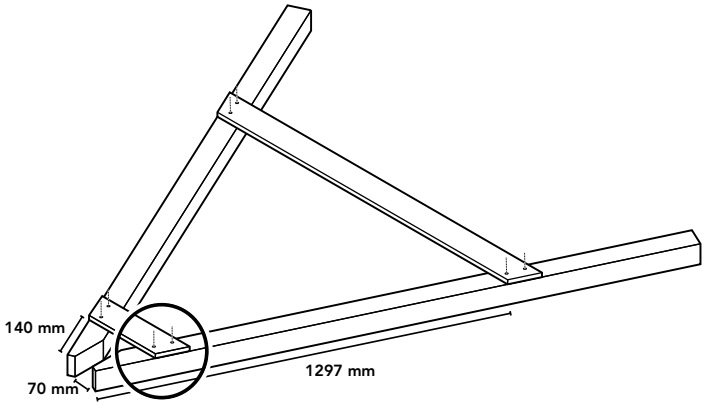

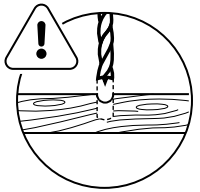

Ø 4 mm

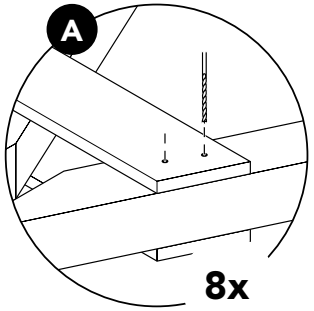

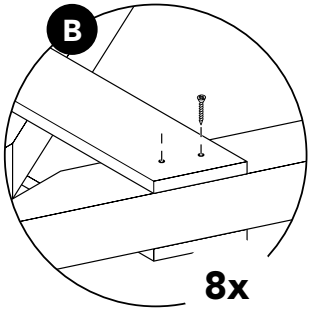

17

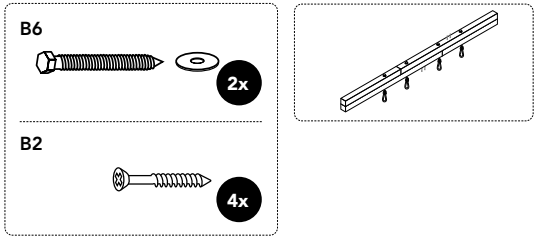

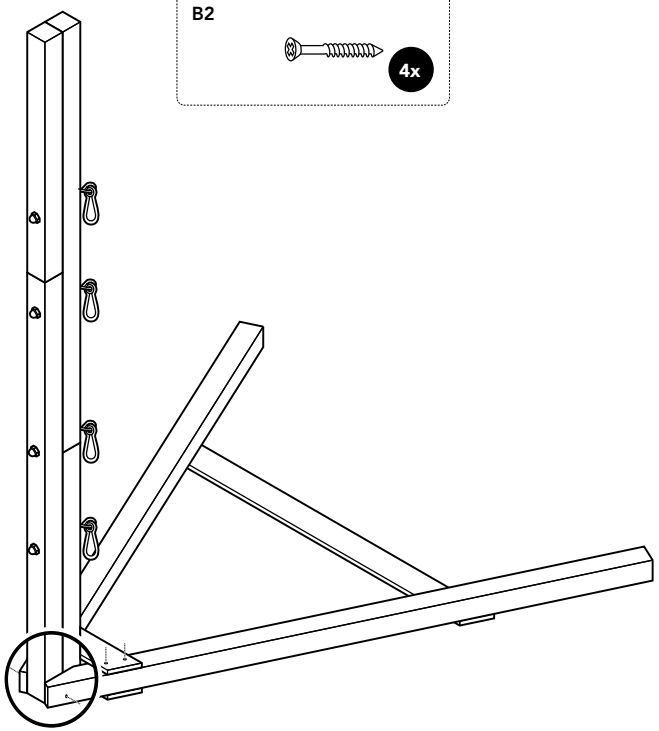

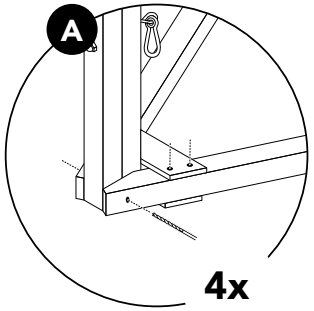

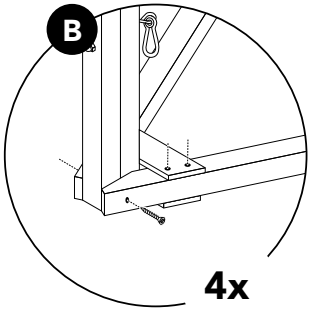

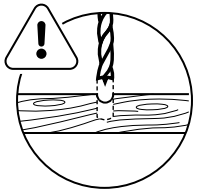

Ø 7 mm

18

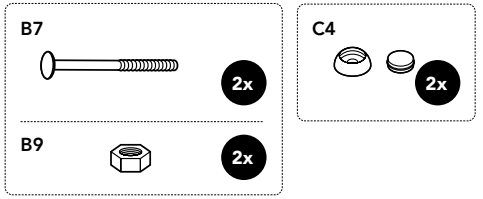

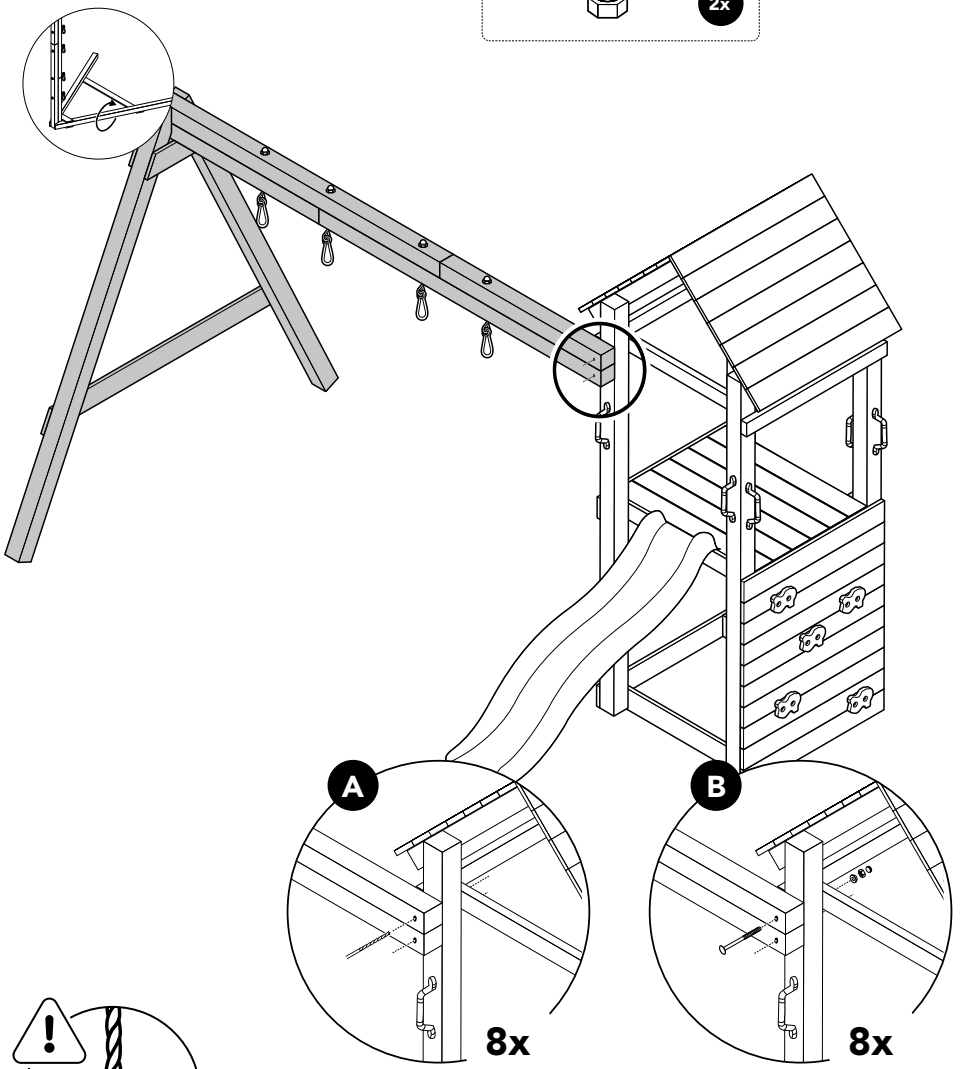

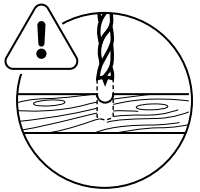

Ø 6 mm

19

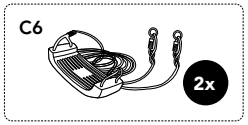

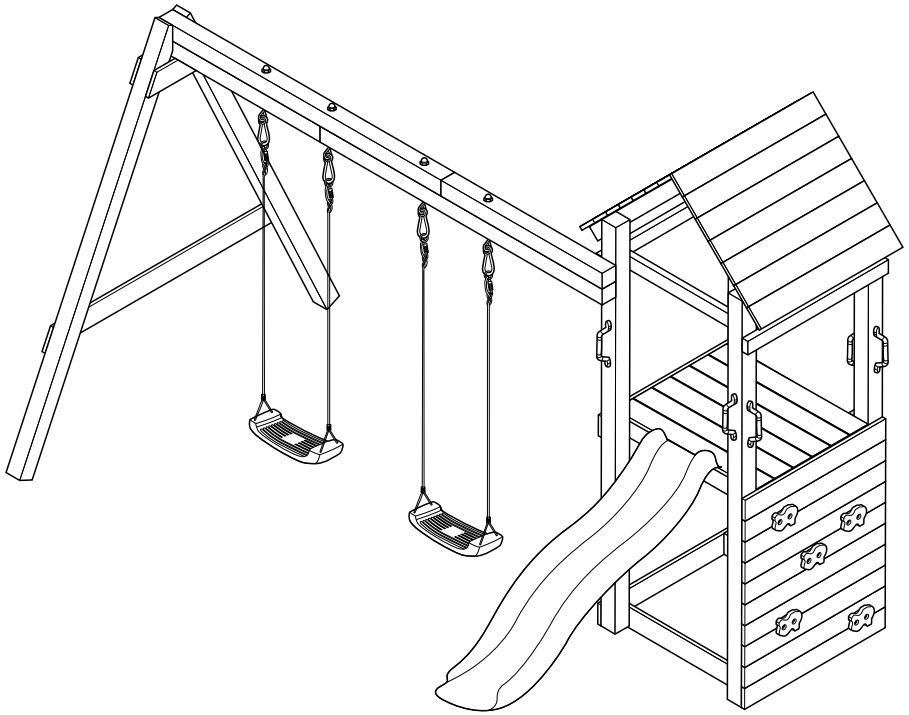

Scan for terms
and conditions

+31(0)318 692 221
www.swingking.nl

Swing King IS A BRAND OF:

HAPRO INTERNATIONAL

8 717306 722193 >

©2022 SWINGKING ART. NR. 7850048

Swing King

Scan for terms
and conditions

COLOR	EAN-CODE	ART. NO.
Blue	8720701430587	7850048
Red	8720701430624	7850048.RD
Yellow	8720701430600	7850048.GL
Apple green	8720701430594	7850048.AG
Green	8720701430617	7850048.GR

+31(0)318 692 221
www.swingking.nl

Swing King IS A BRAND OF:

HAPRO INTERNATIONAL

Morsestraat 6, 6716 AH Ede - The Netherlands

UK CA

CE

8 720701 430587 >

©2023 SWINGKING ART. NR. 7850048 V2.6