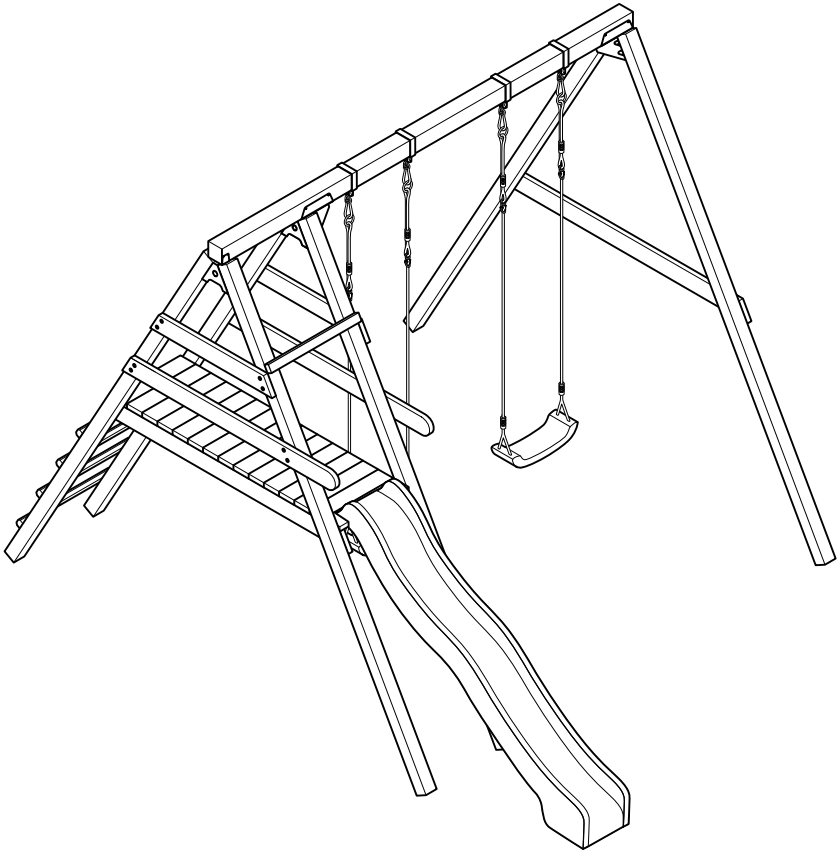

Celina

ART. NR. 7888002

TÜV NORD GS geprüfte Sicherheit

0-3

Swing King

Celina

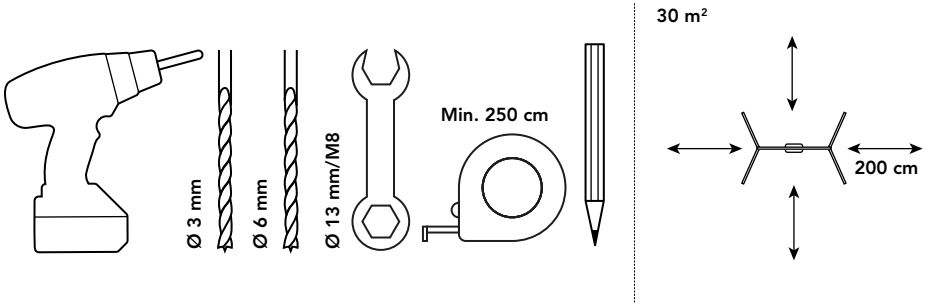
Ø 3 mm
Ø 6 mm
Ø 13 mm/M8
Min. 250 cm
30 m²
200 cm

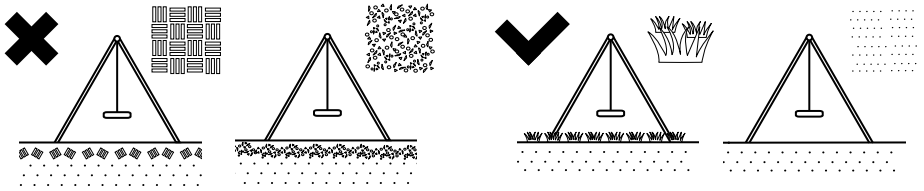

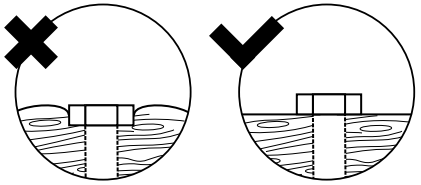

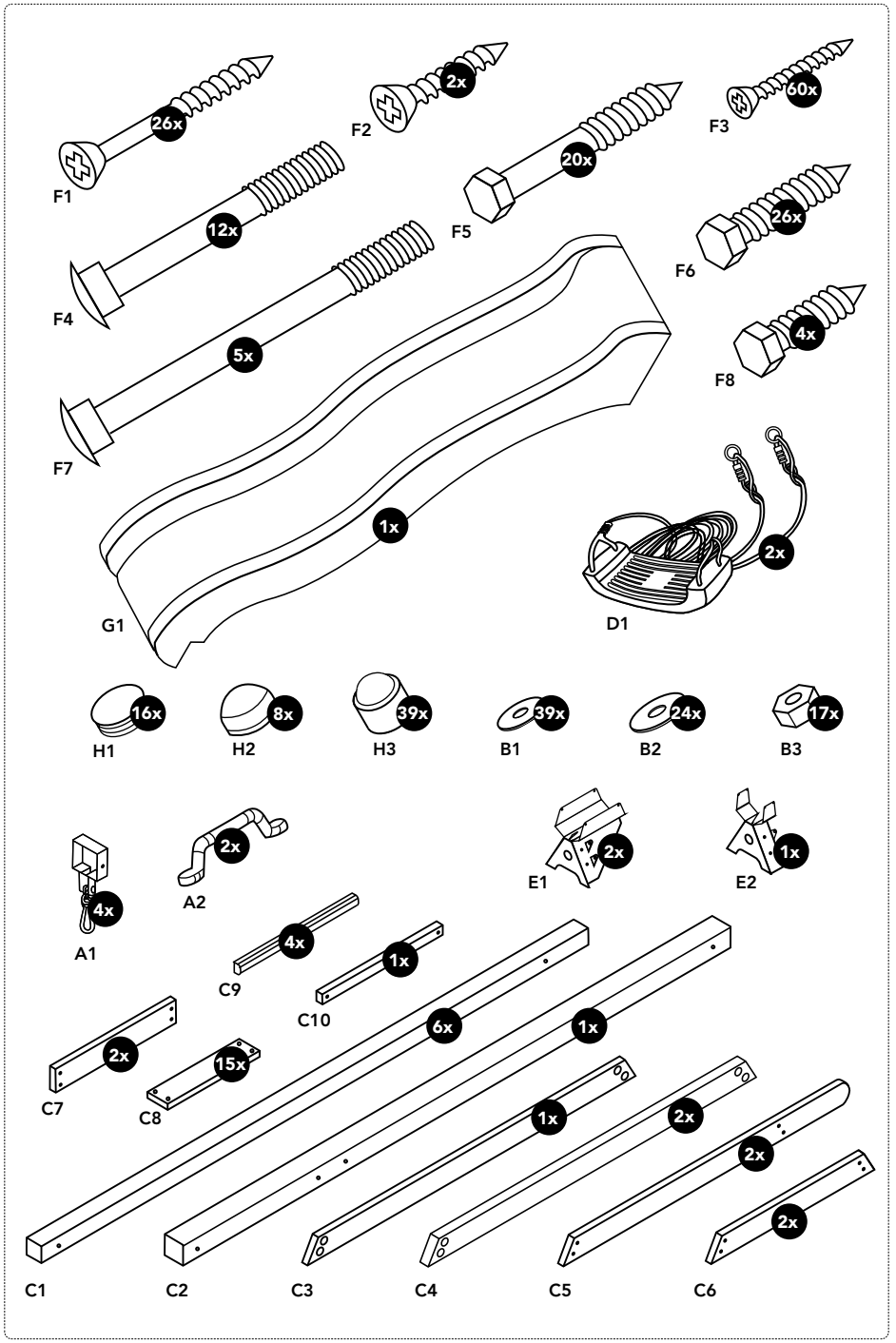
26x
F1
2x
F2
60x
F3
12x
F4
20x
F5
26x
F6
5x
F7
4x
F8
1x
G1
2x
D1
16x
H1
8x
H2
39x
H3
39x
B1
24x
B2
17x
B3
4x
A1
2x
A2
2x
E1
1x
E2
4x
C9
1x
C10
2x
C7
15x
C8
6x
C1
1x
C2
1x
C3
2x
C4
2x
C5
2x
C6

1

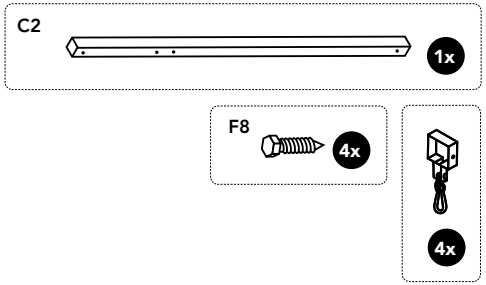
C2
1x
F8
4x
4x

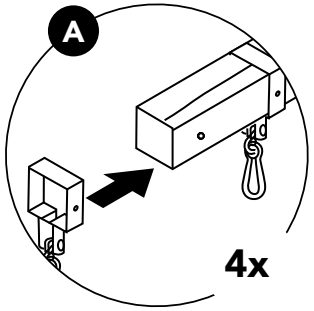
A
4x

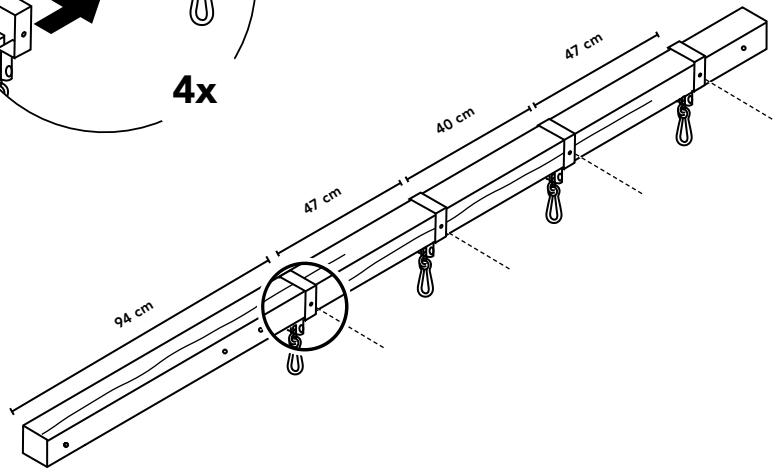
94 cm
47 cm
40 cm
47 cm

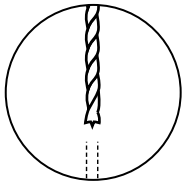
Ø 6 mm

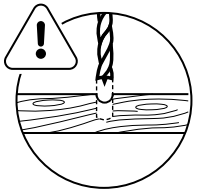
3,5 mm

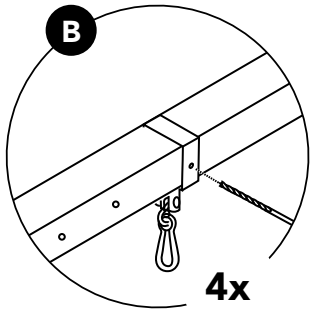
B
4x

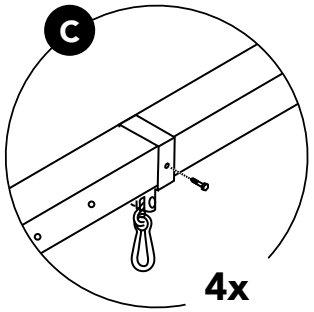
C
4x

2

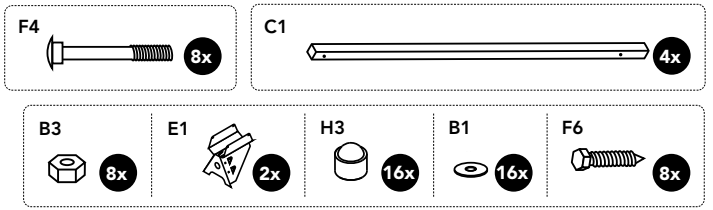
F4
8x
C1
4x
B3
8x
E1
2x
H3
16x
B1
16x
F6
8x

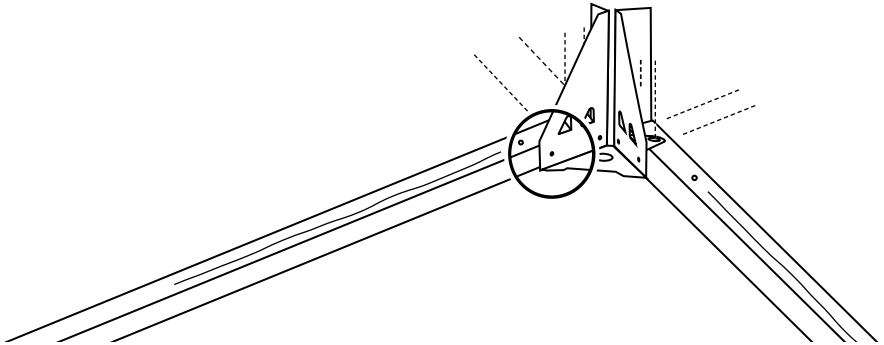

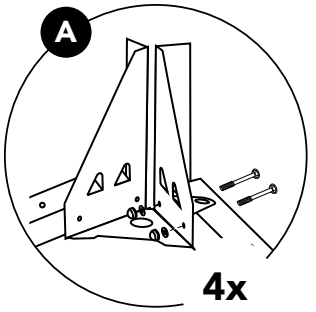
A
4x

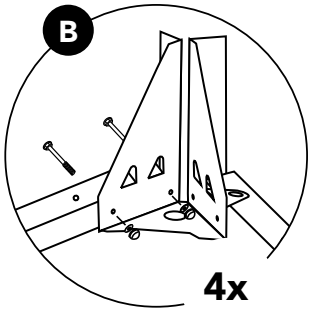
B
4x

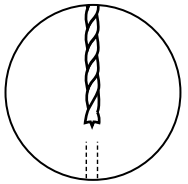
Ø 6 mm

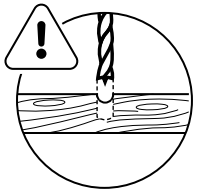
3,5 mm

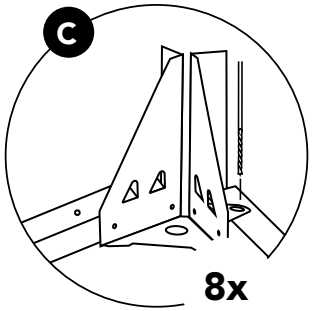
C
8x

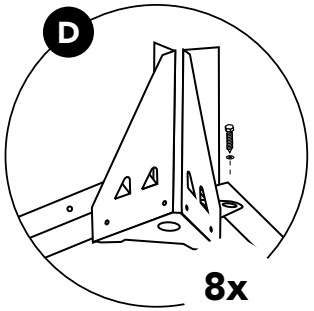
D
8x

3

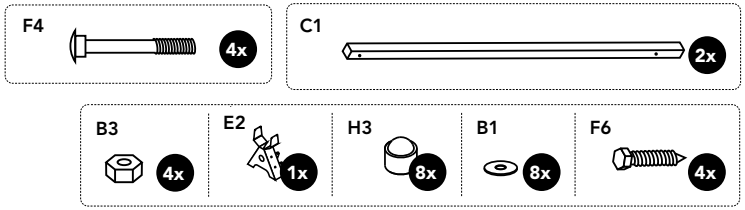
F4
4x
C1
2x
B3
4x
E2
1x
H3
8x
B1
8x
F6
4x

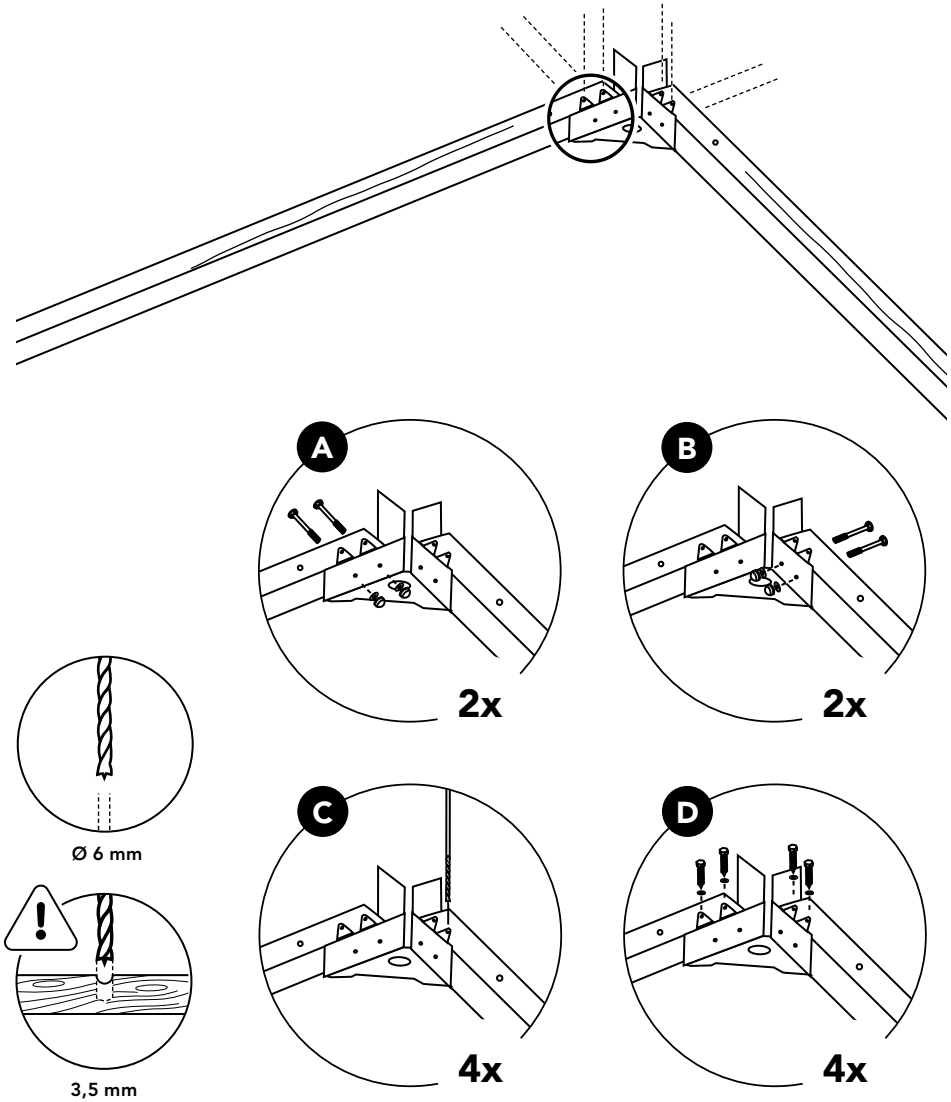
A
2x
B
2x
Ø 6 mm
C
4x
D
4x
3,5 mm

4

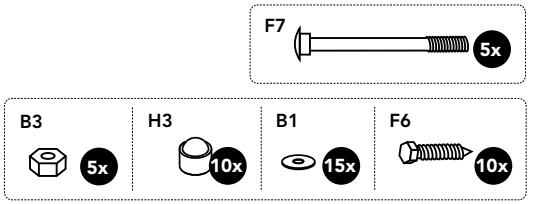
F7
5x
B3
5x
H3
10x
B1
15x
F6
10x

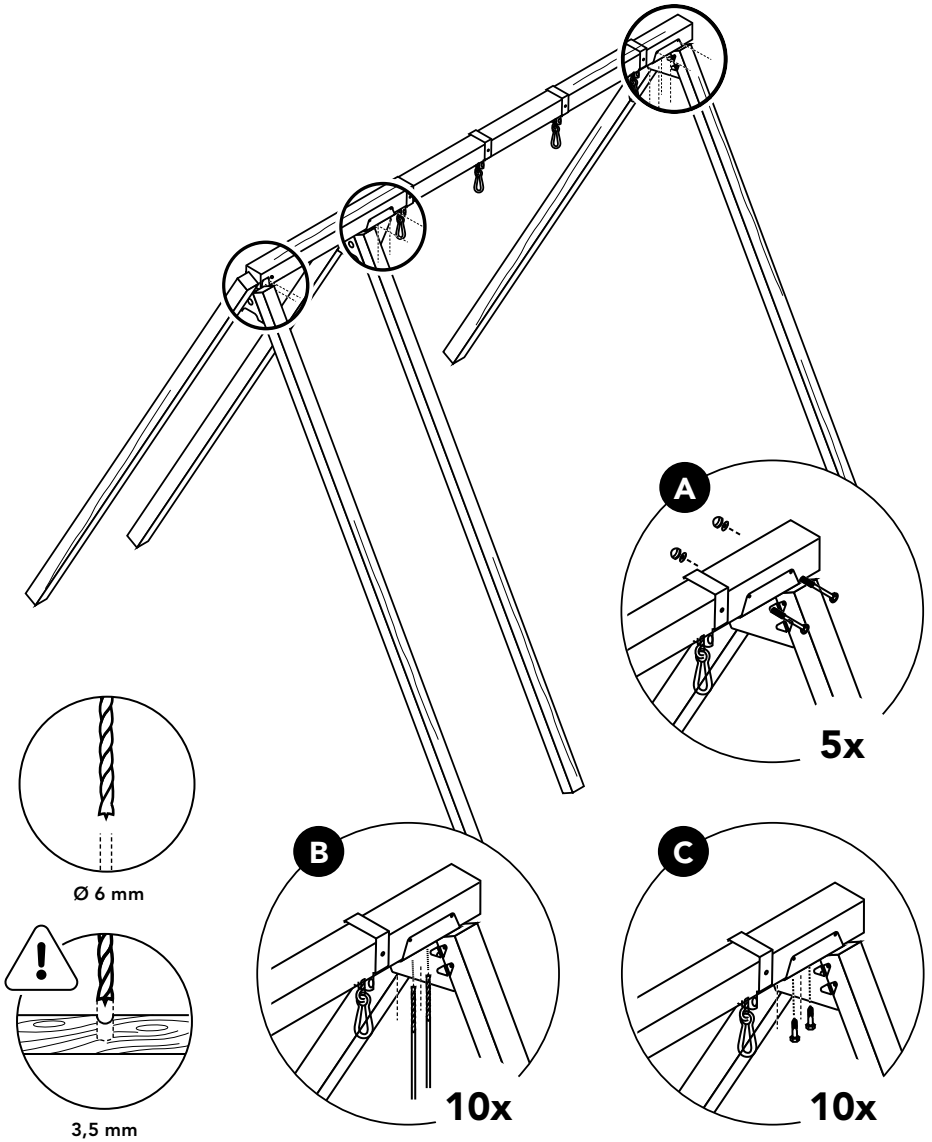
A
5x
Ø 6 mm
B
10x
C
10x
3,5 mm

5

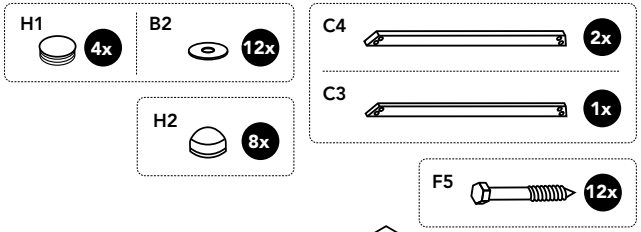
H1
4x
B2
12x
H2
8x
C4
2x
C3
1x
F5
12x

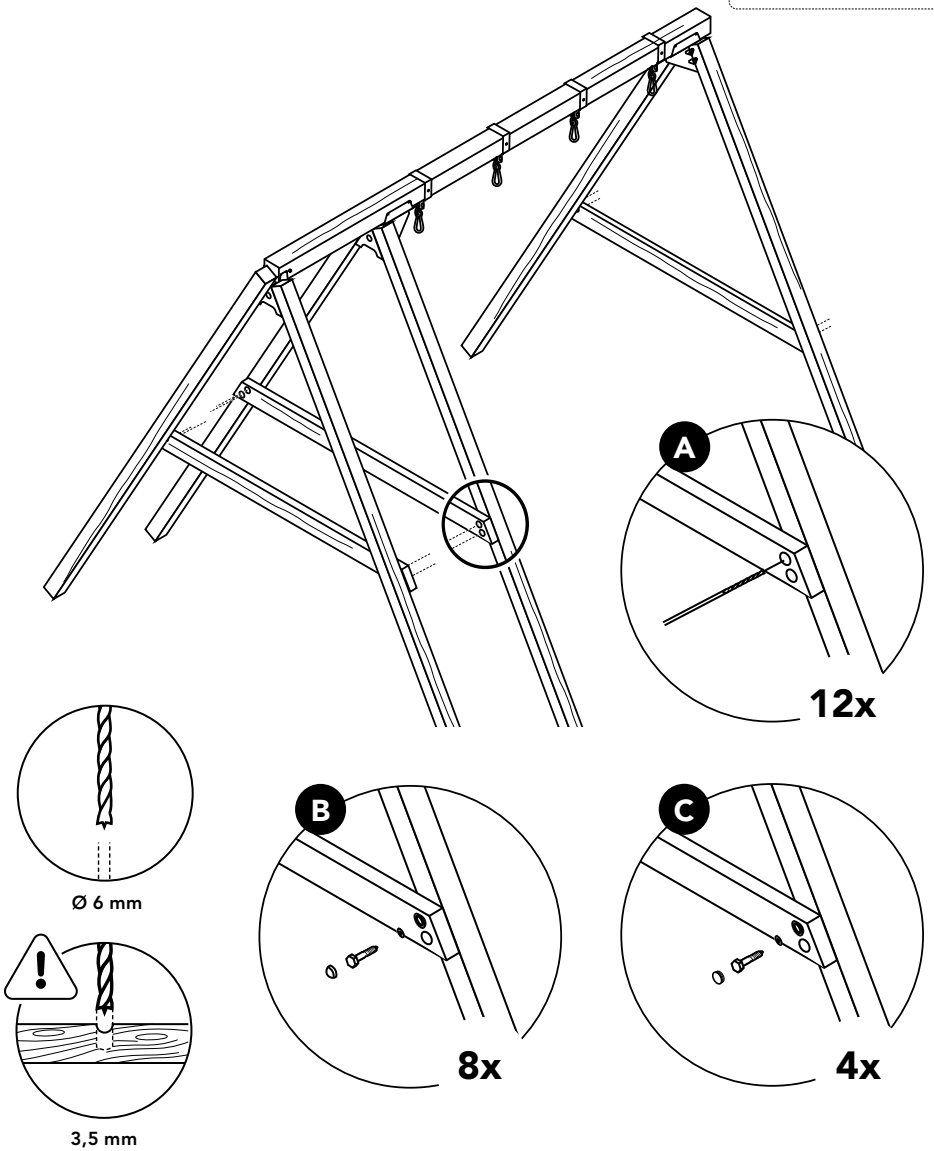
A
12x
Ø 6 mm
B
8x
C
4x
3,5 mm

6

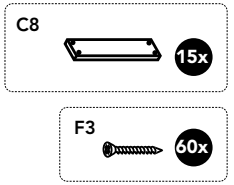
C8
15x
F3
60x

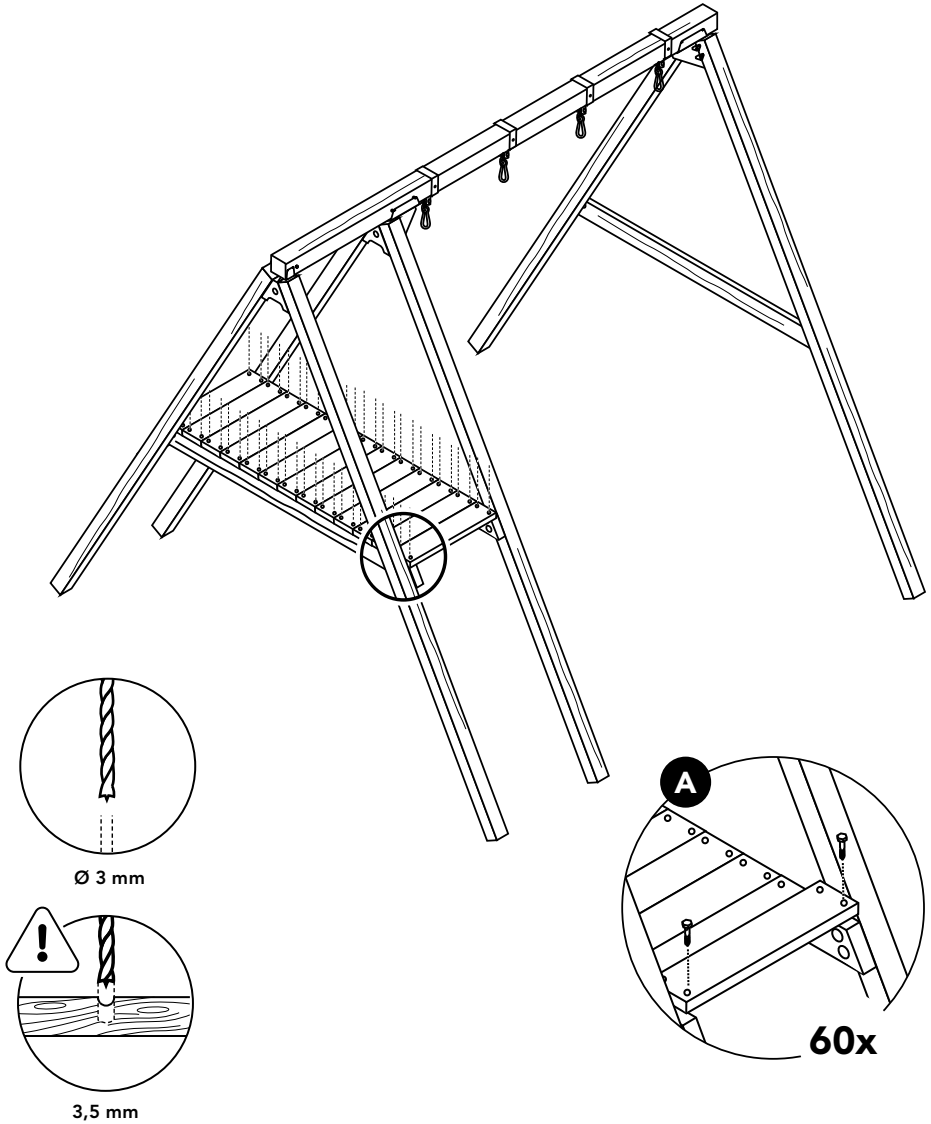
Ø 3 mm
A
60x
3,5 mm

7

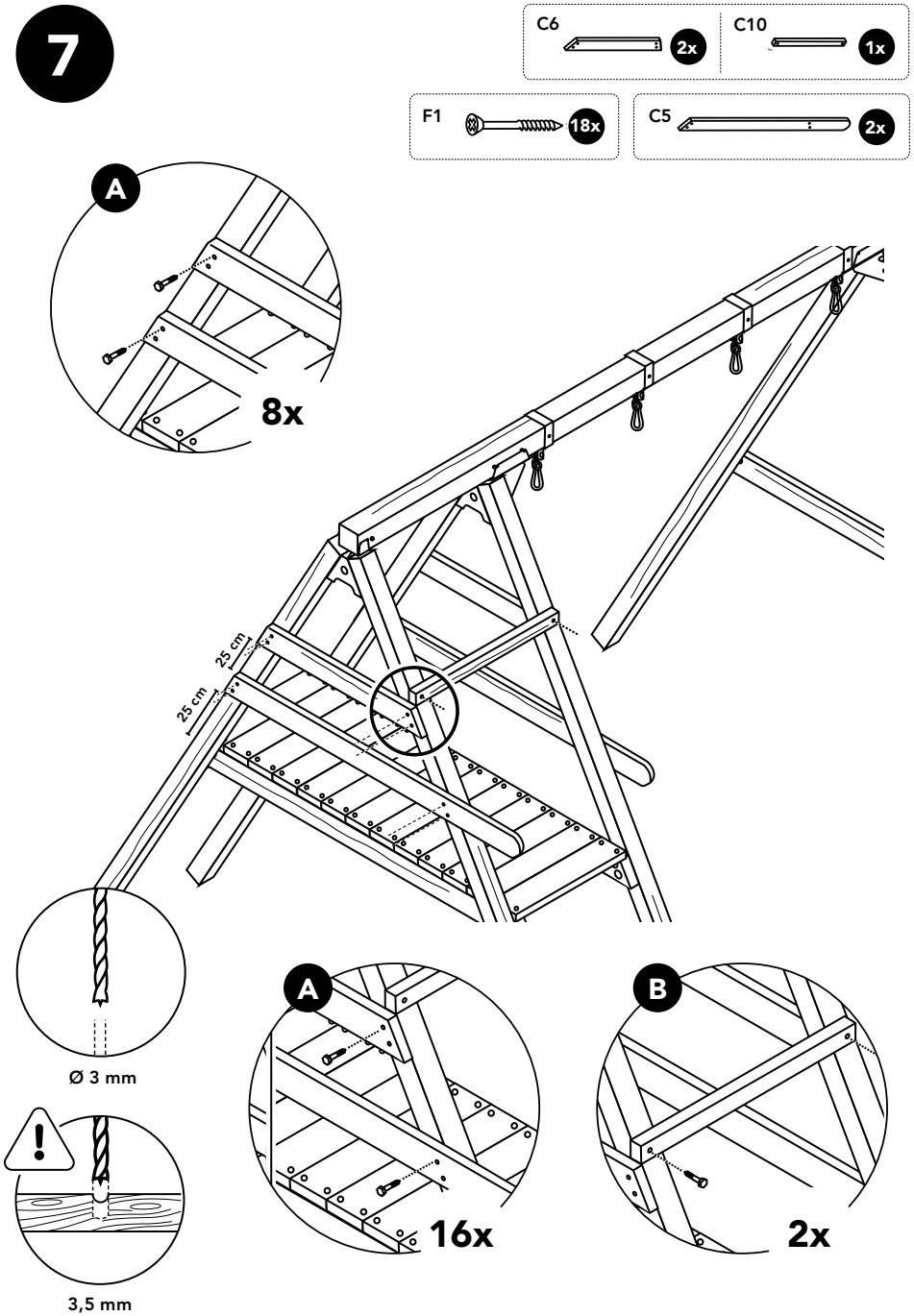
C6
2x
C10
1x
F1
18x
C5
2x
A
8x
25 cm
25 cm
Ø 3 mm
3,5 mm
A
16x
B
2x

8

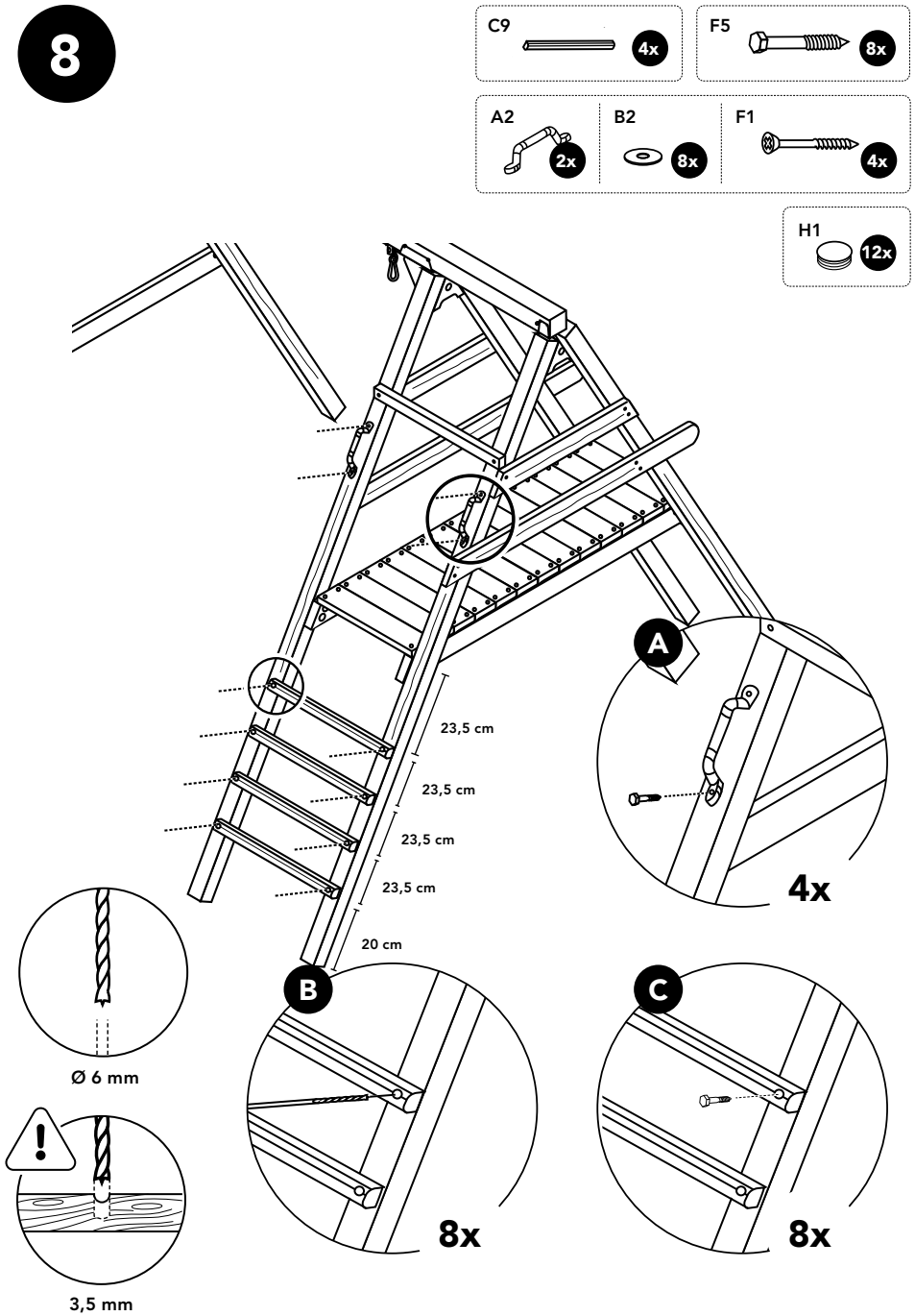
C9
4x
F5
8x
A2
2x
B2
8x
F1
4x
H1
12x
23,5 cm
23,5 cm
23,5 cm
23,5 cm
20 cm
A
4x
Ø 6 mm
3,5 mm
B
8x
C
8x

9

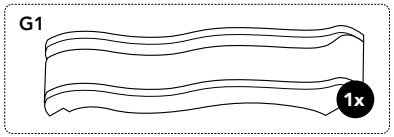

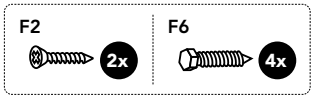

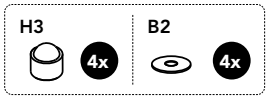

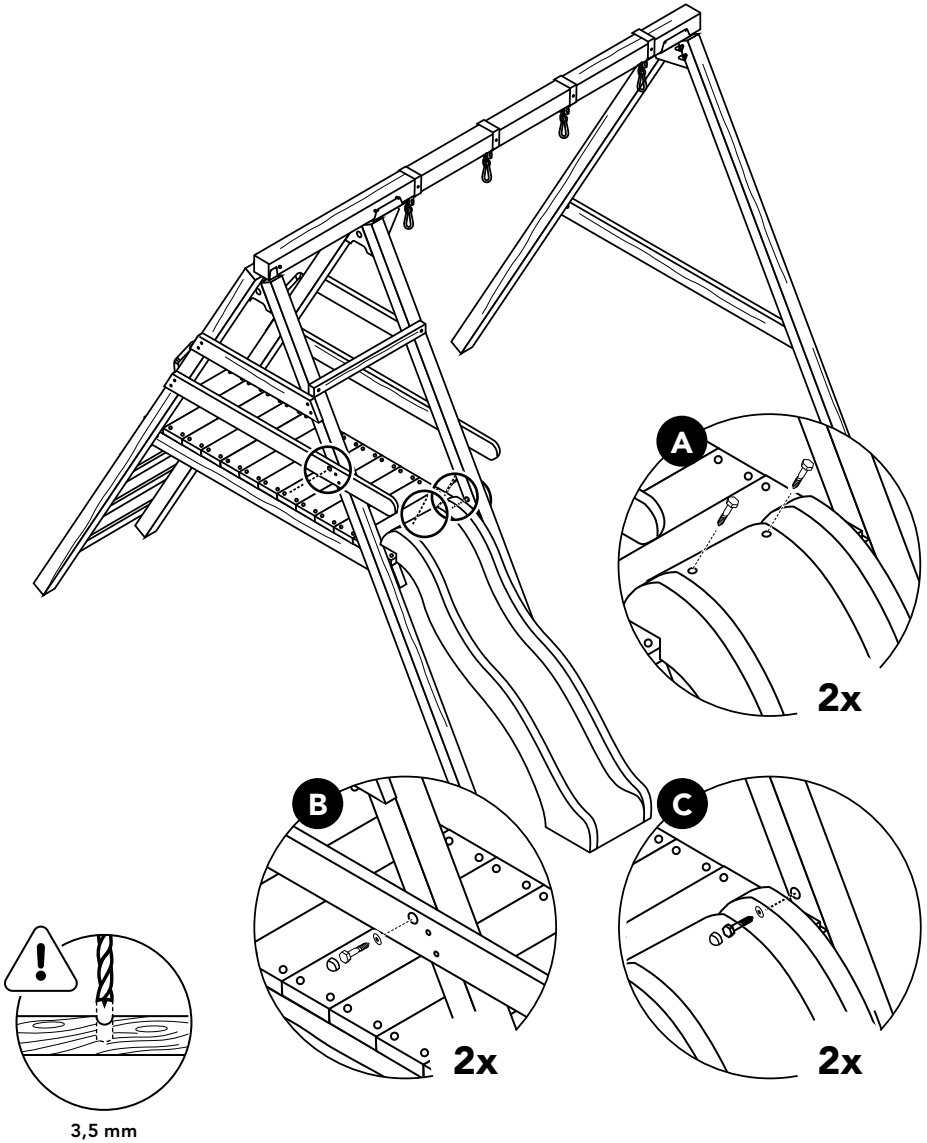

10

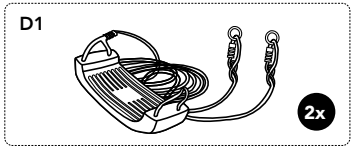

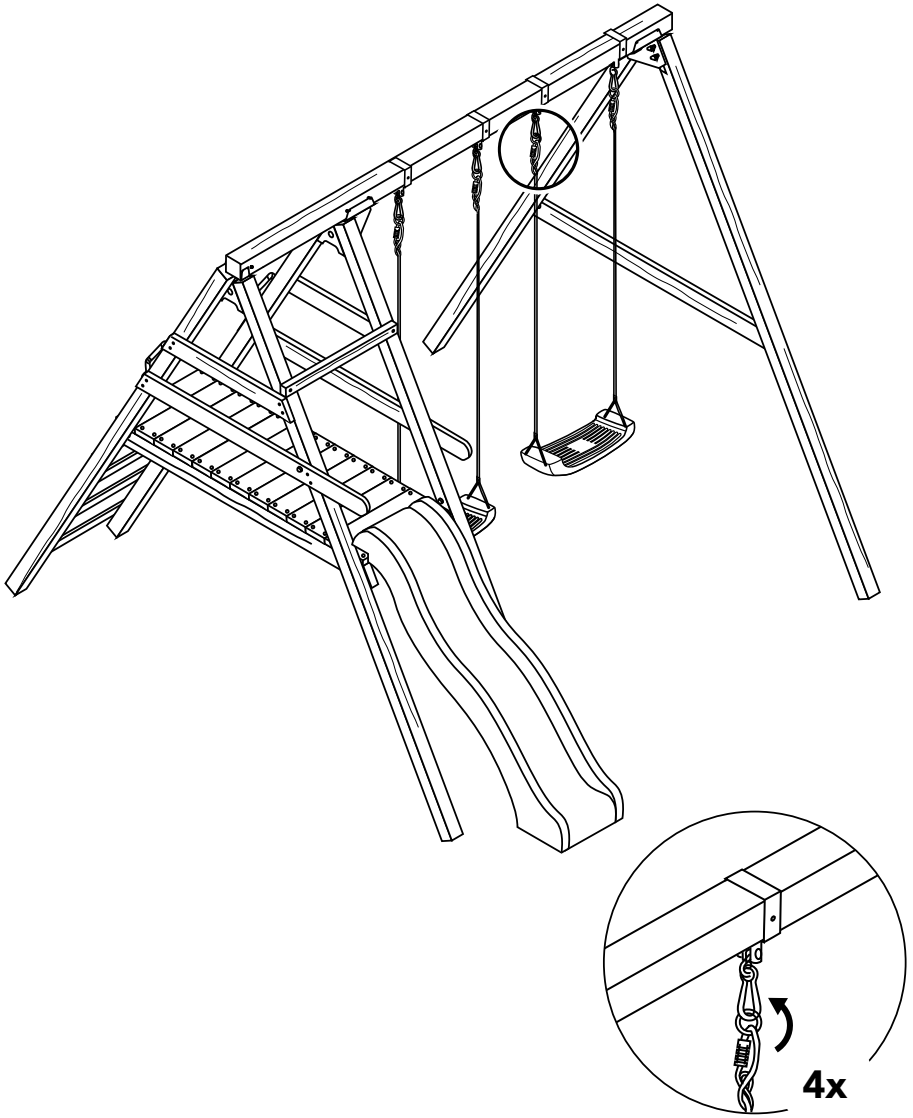

Swing King

Scan for terms
and conditions

COLOR	EAN-CODE	ART. NO.
Blue	8717306719537	7888002
Red	8717306720922	7888002.RD
Yellow	8717306720908	7888002.GL
Apple green	8717306720885	7888002.AG
Green	8717306720915	7888002.GR

+31(0)318 692 221
www.swingking.nl

Swing King IS A BRAND OF:

HAPRO INTERNATIONAL

Morsestraat 6, 6716 AH Ede - The Netherlands

8 717306 719537 >

©2023 SWINGKING ART. NR. 7888002 V.1