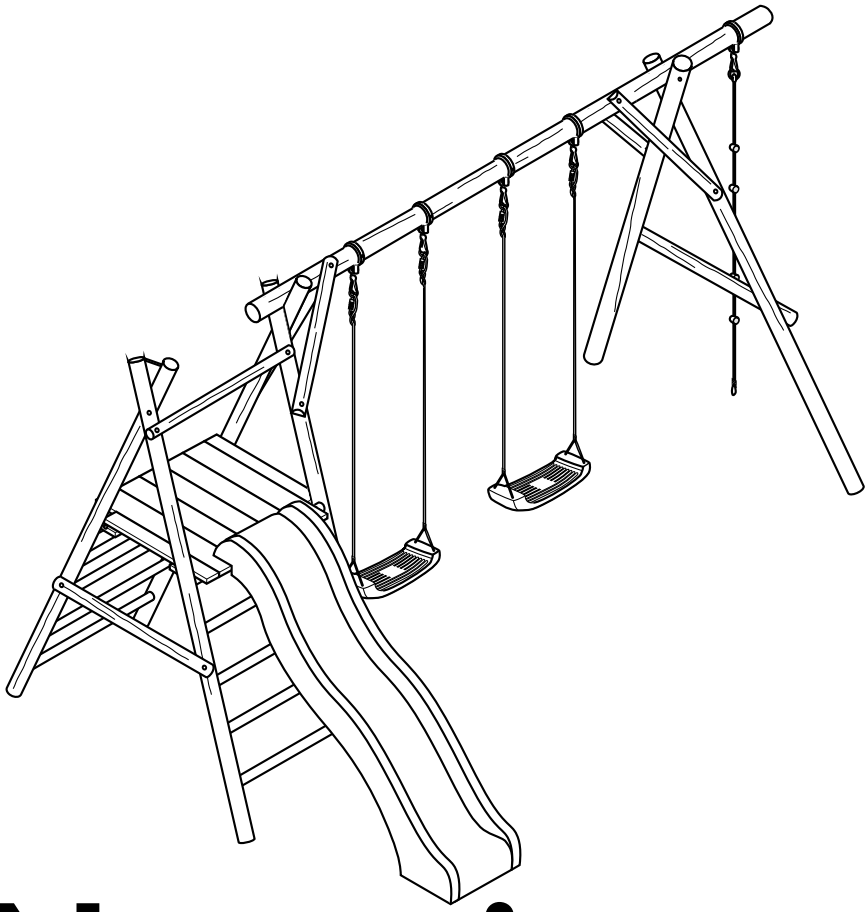

Noortje

ART. NR. 7880108

TÜV NORD
TÜV NORD CERT GmbH
Baumuster geprüft

0-3

Swing King

Noortje

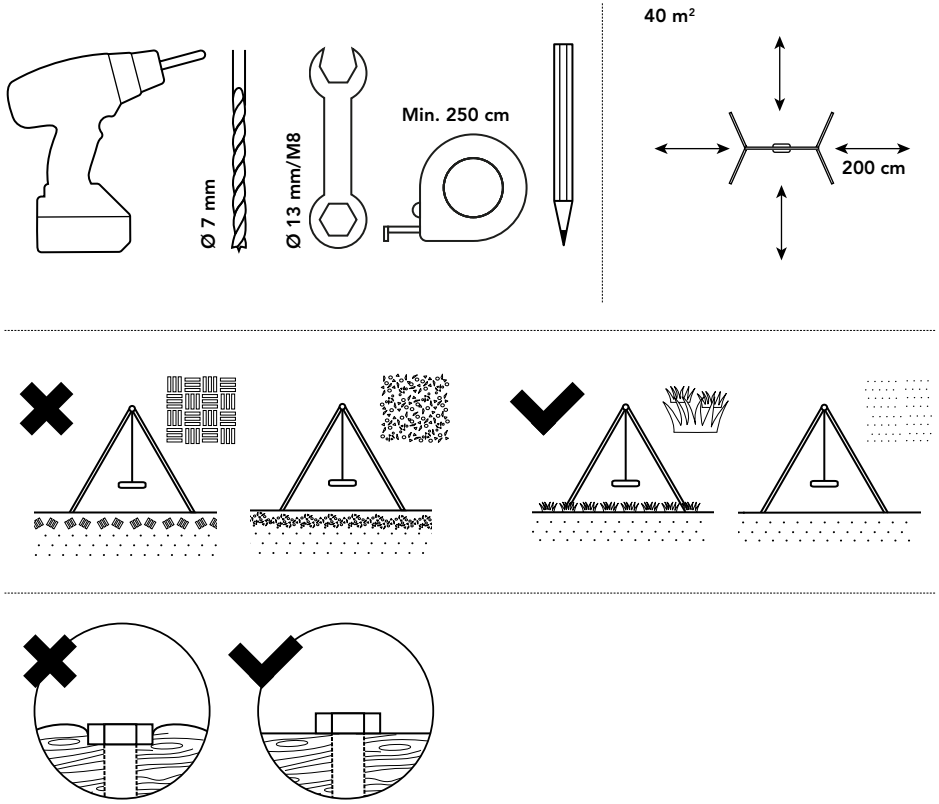
Ø 7 mm
Ø 13 mm/M8
Min. 250 cm
40 m²
200 cm
I1
1x

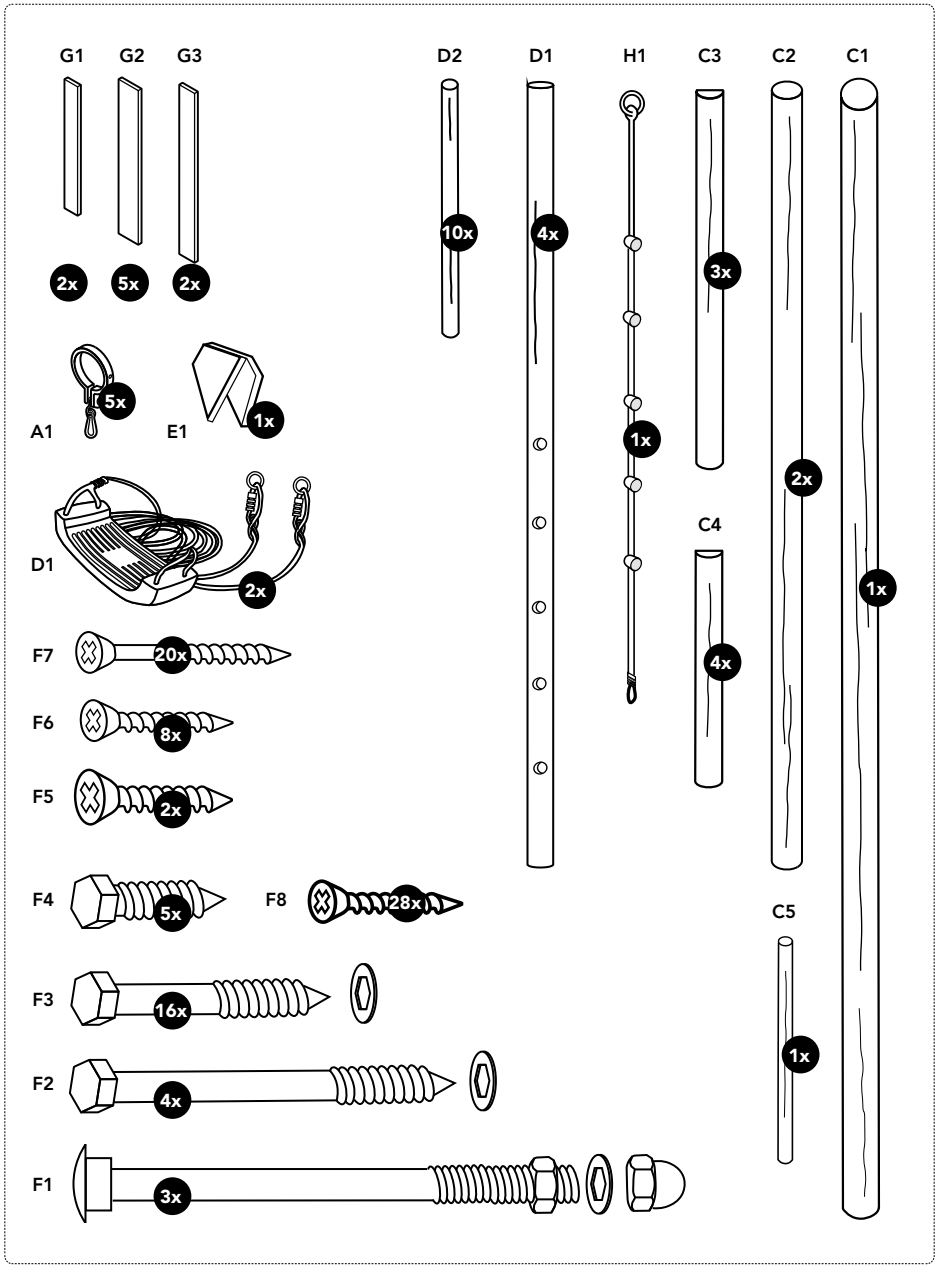
G1
G2
G3
D2
D1
H1
C3
C2
C1
2x
5x
2x
10x
4x
3x
2x
1x
A1
5x
E1
1x
D1
2x
C4
4x
1x
F7
20x
F6
8x
F5
2x
F4
5x
F8
28x
C5
1x
F3
16x
F2
4x
F1
3x

1

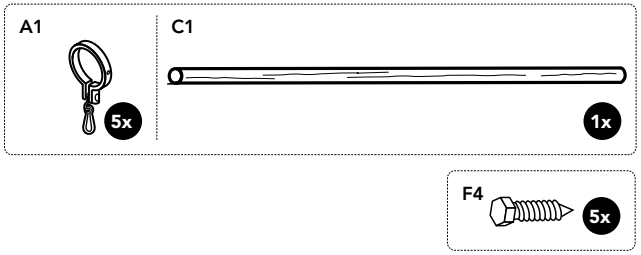
A1
5x
C1
1x
F4
5x

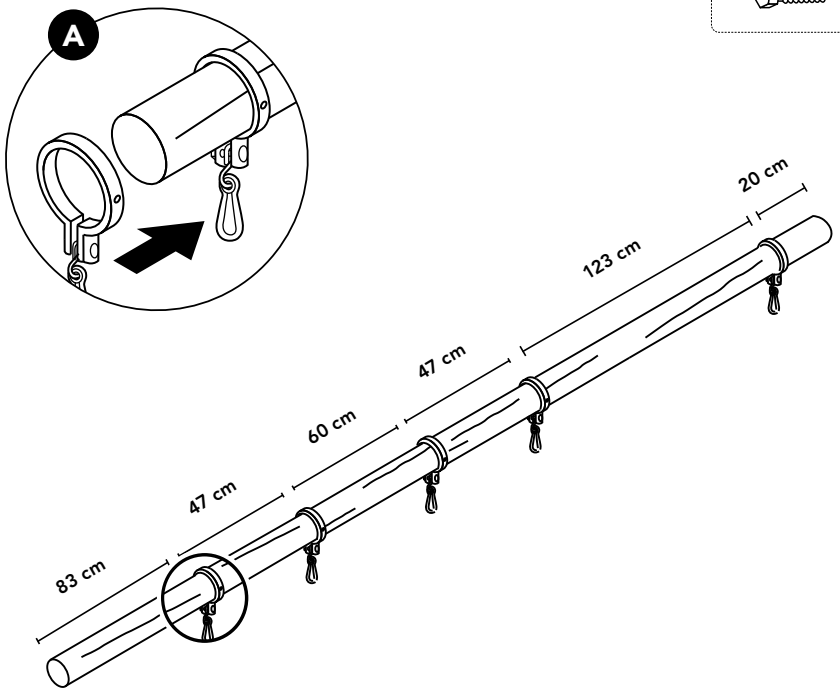
A
83 cm
47 cm
60 cm
47 cm
123 cm
20 cm

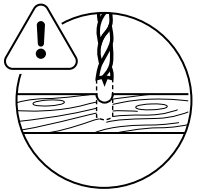

3,5 mm

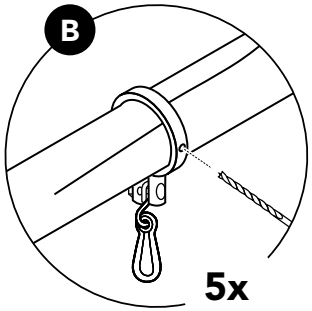
B
5x

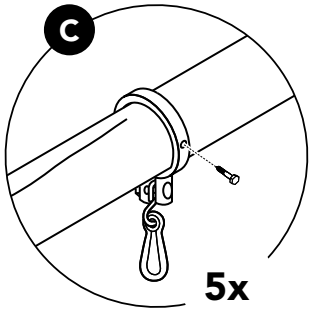
C
5x

2

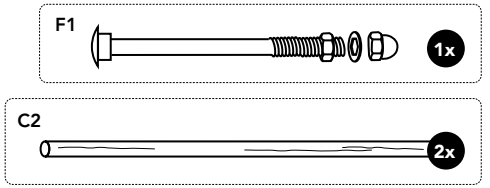
F1
1x
C2
2x

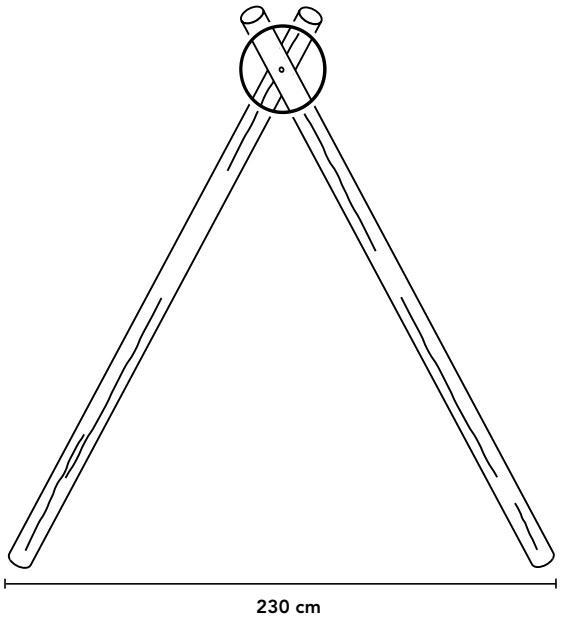
230 cm

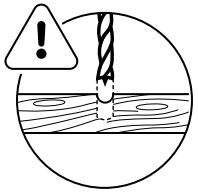

3,5 mm

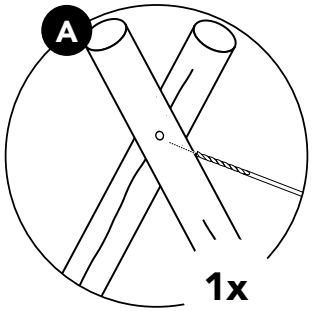
A
1x

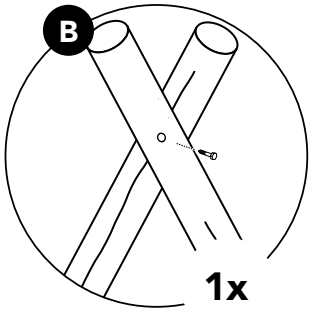
B
1x

3

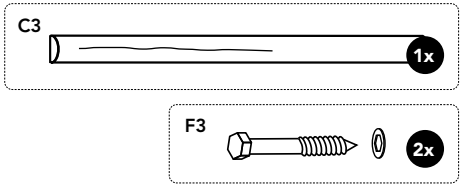

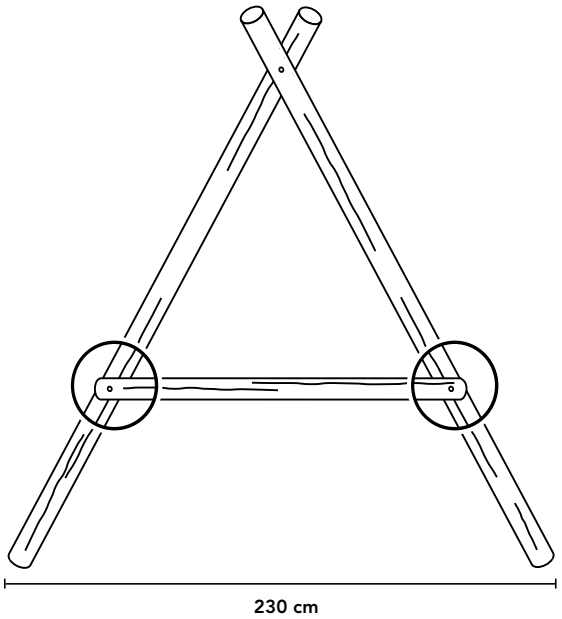

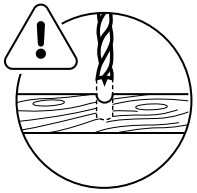

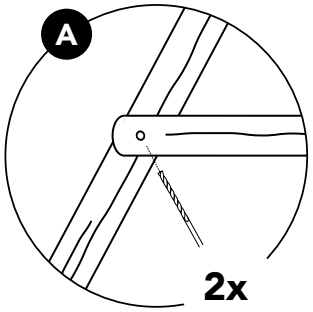

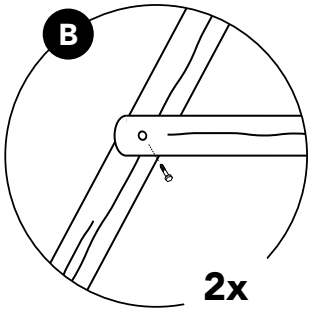

4

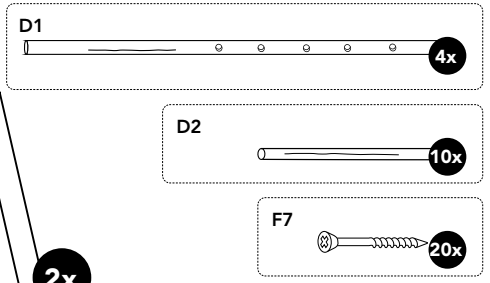

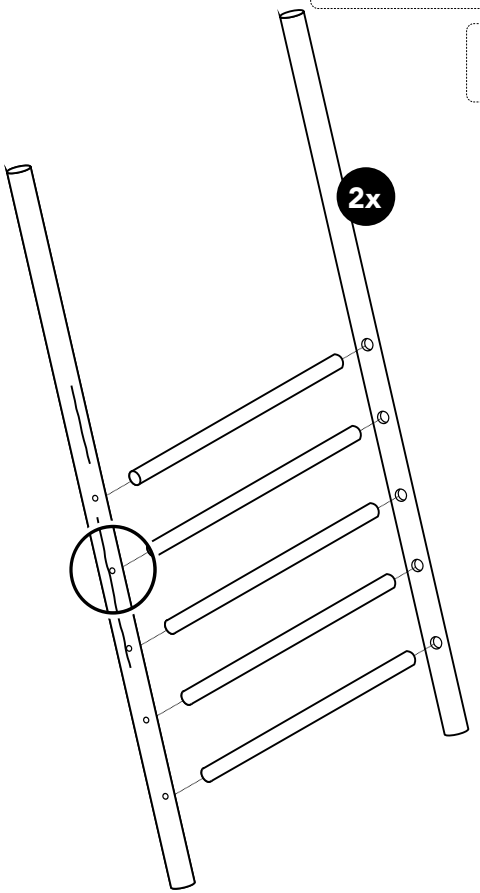

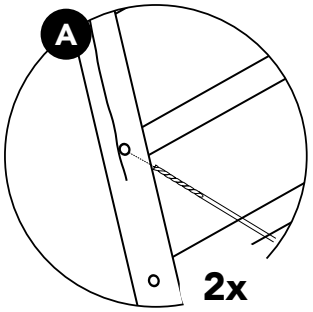

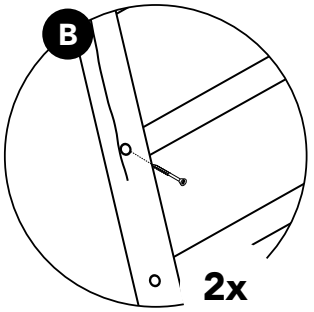

5

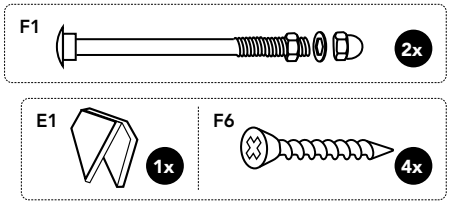

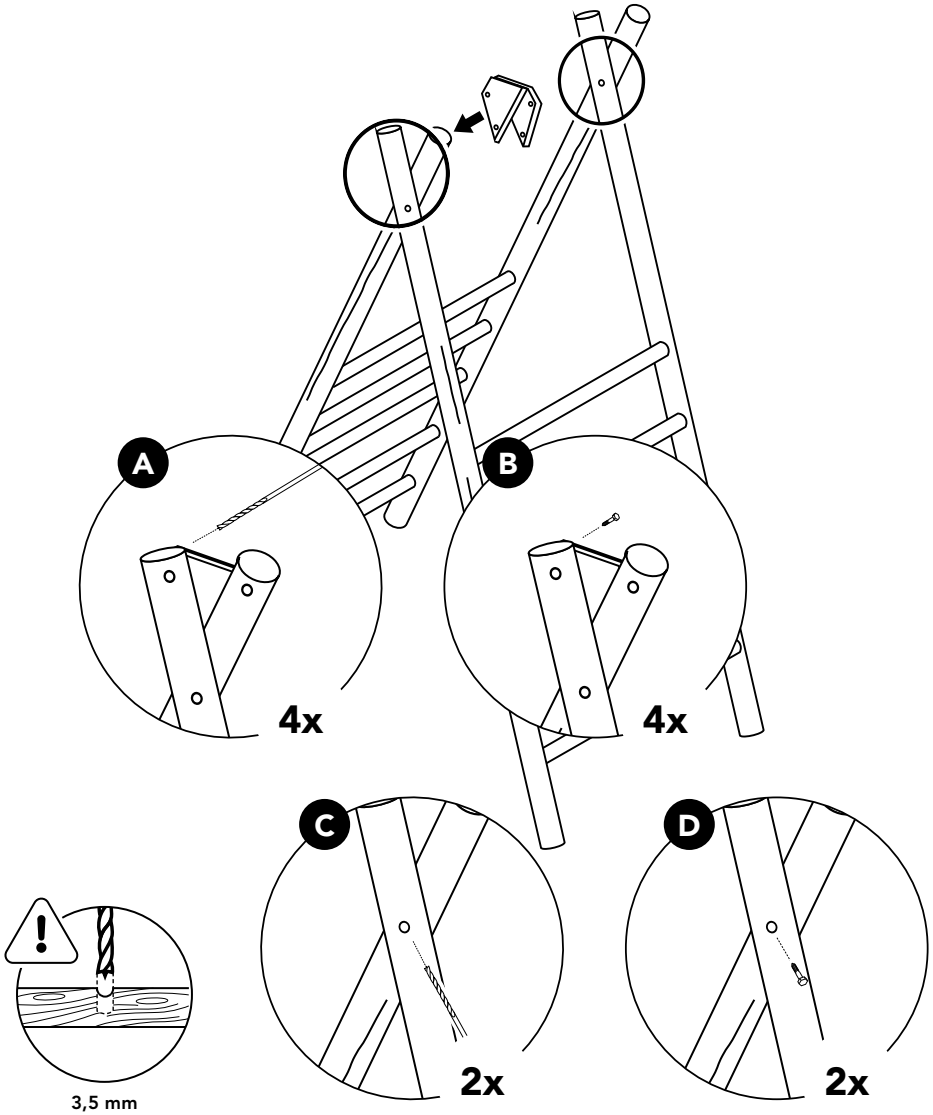

6

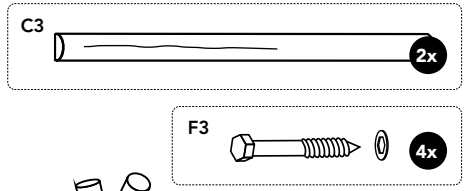

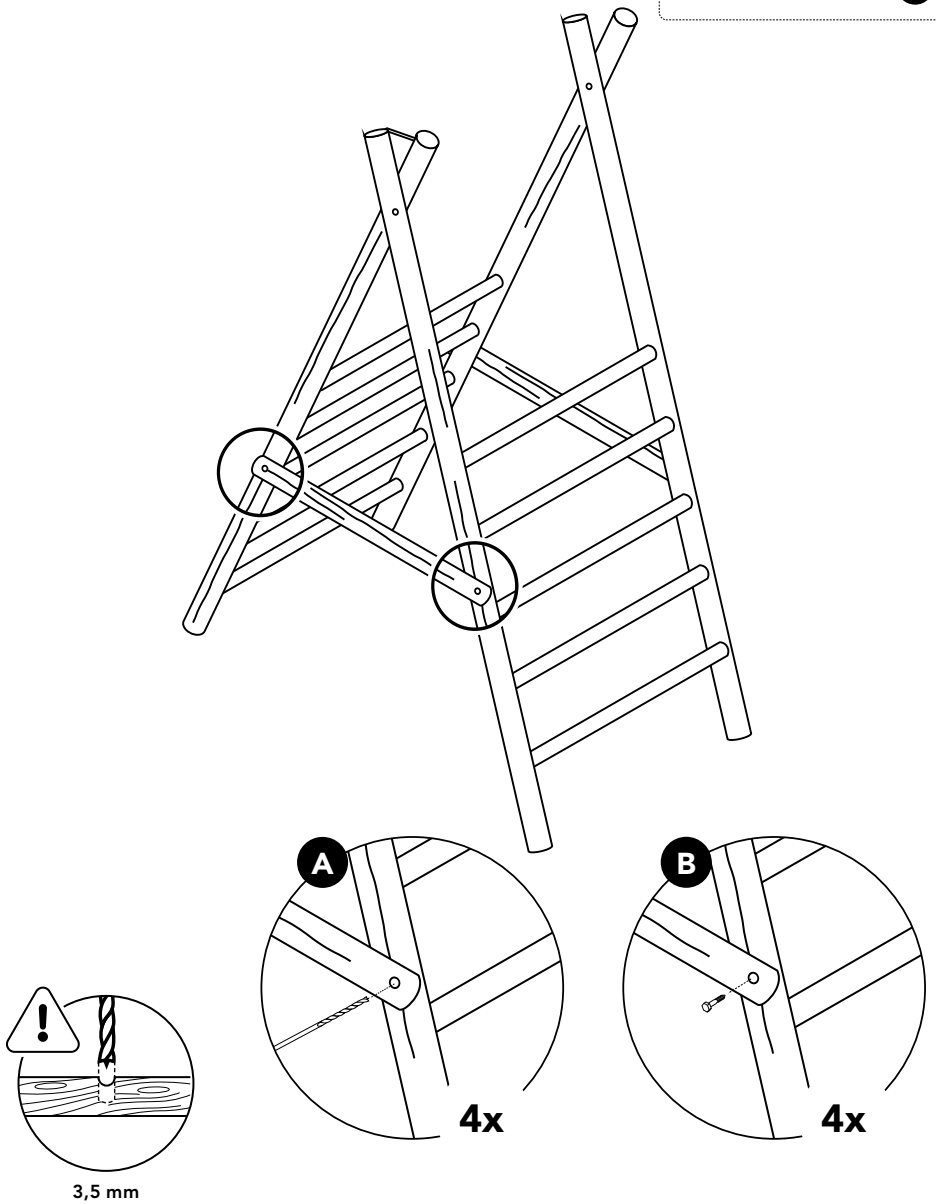

7

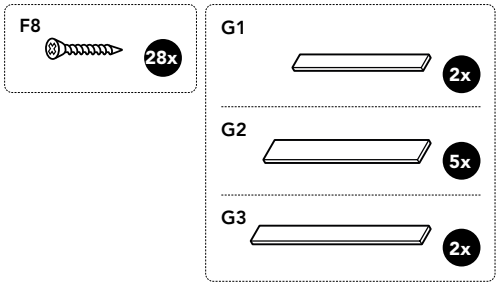
F8
28x
G1
2x
G2
5x
G3
2x

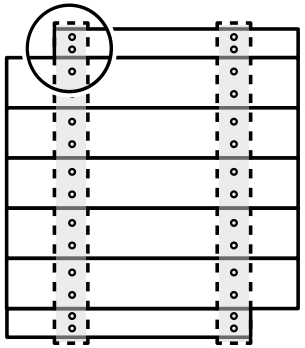

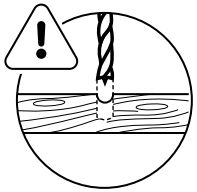
3,5 mm

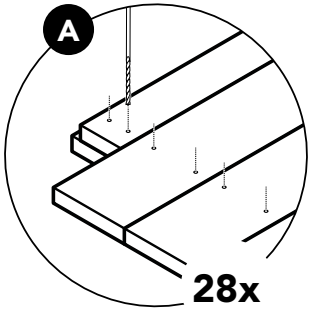
A
28x

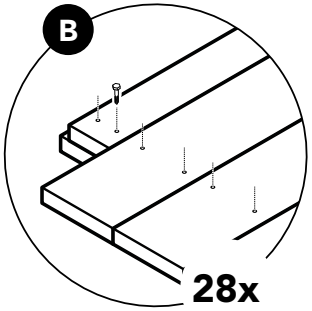
B
28x

8

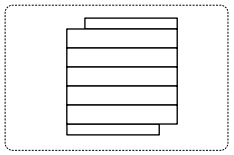

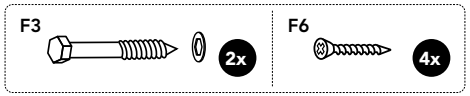
F3
2x
F6
4x

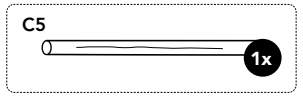
C5
1x

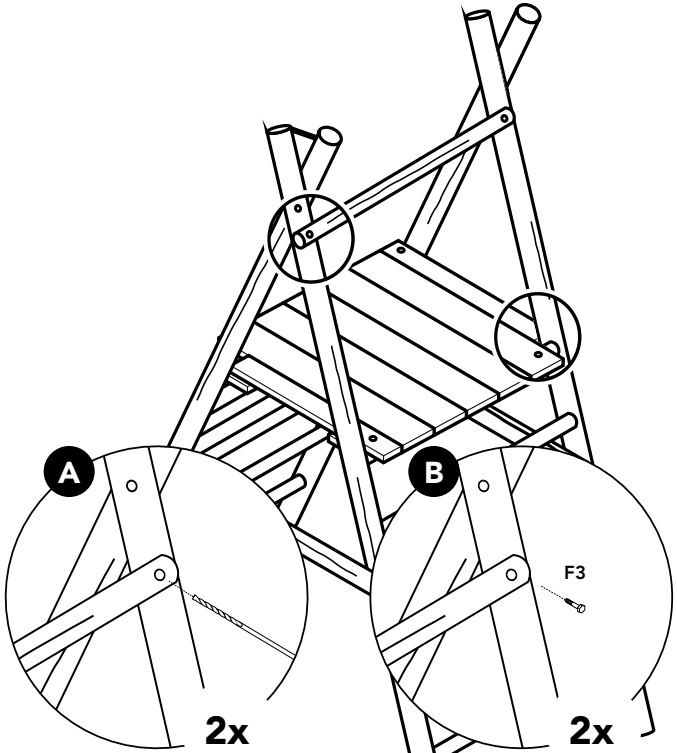
A
2x
B
F3
2x

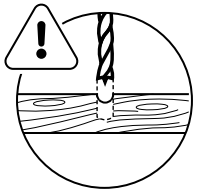
3,5 mm

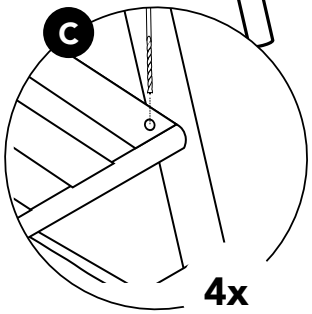
C
4x

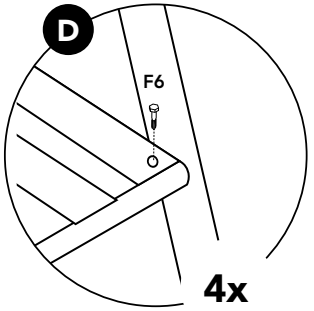
D
F6
4x

9

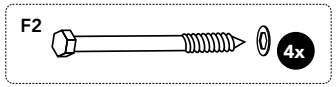

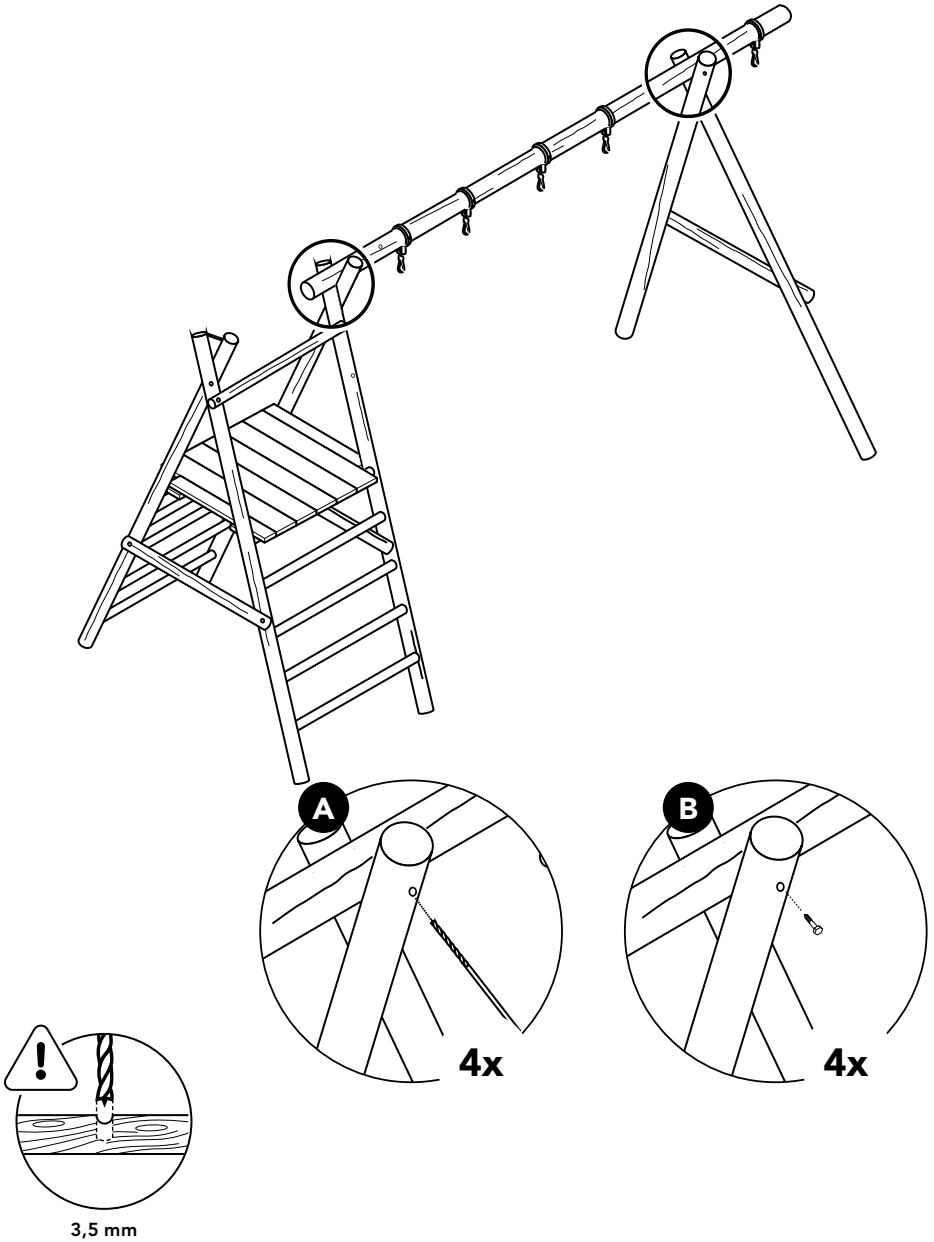

10

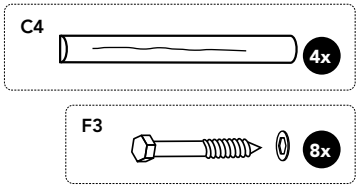

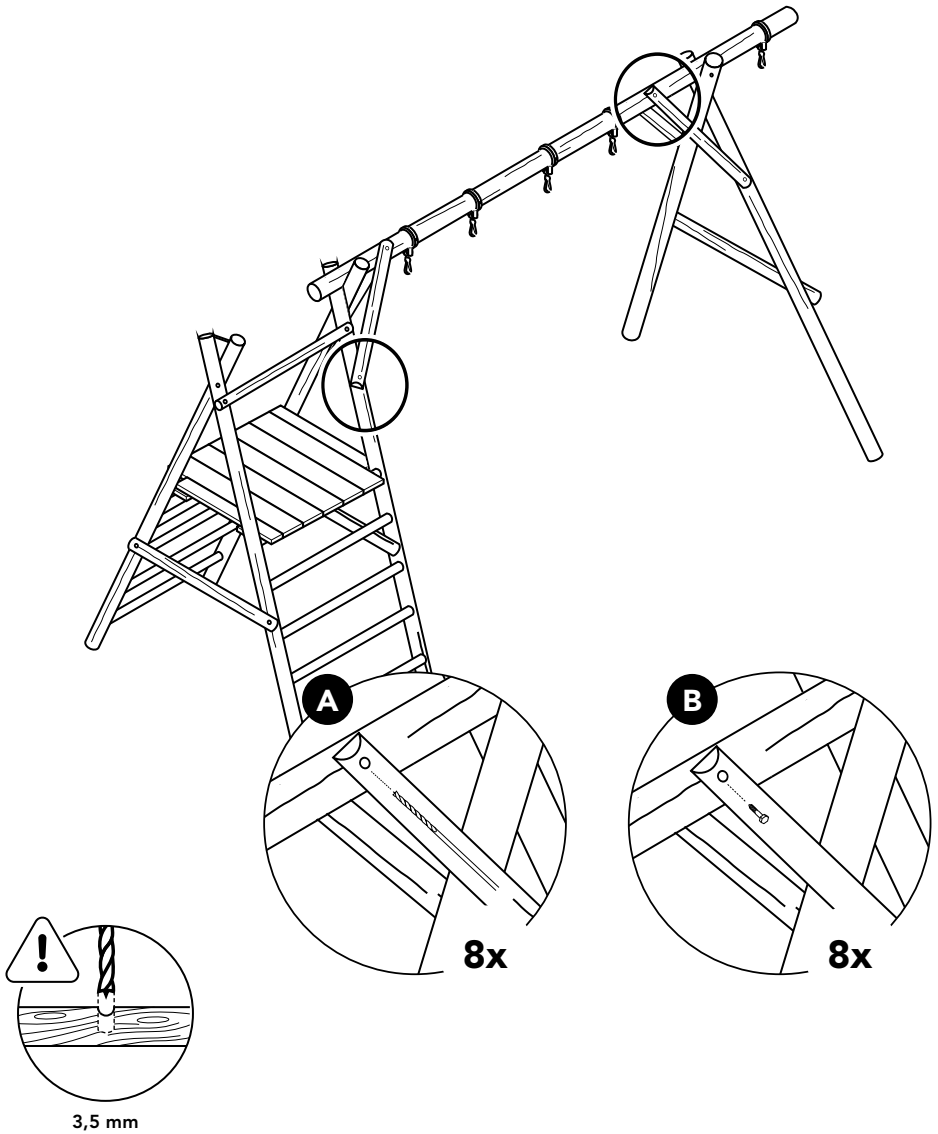

11

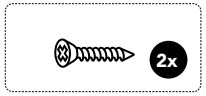

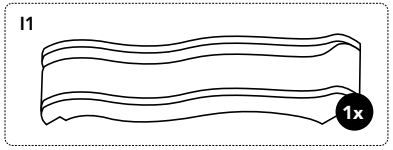

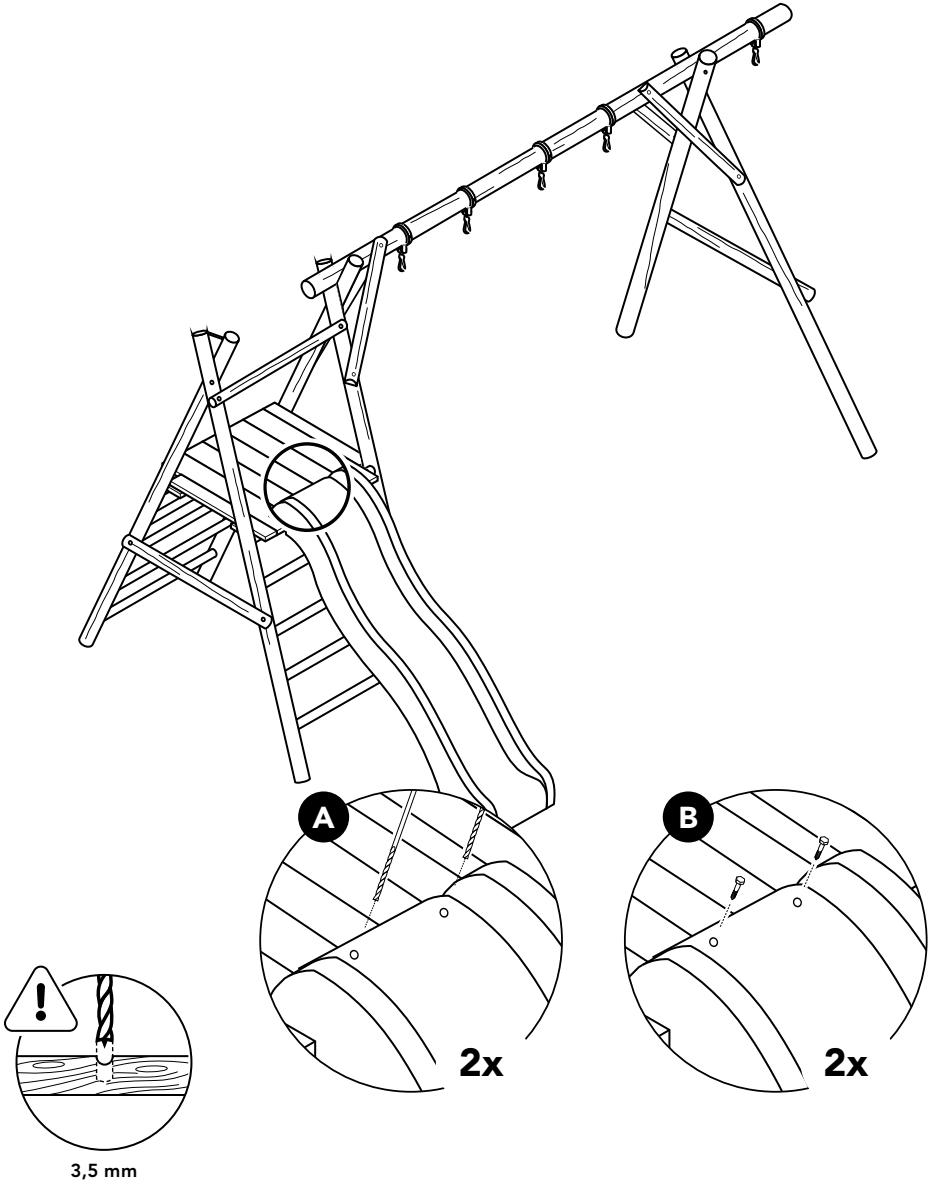

12

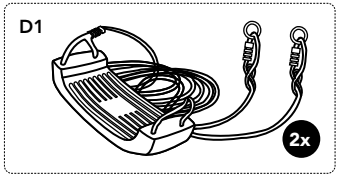

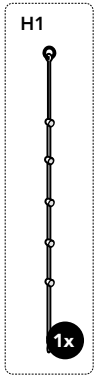

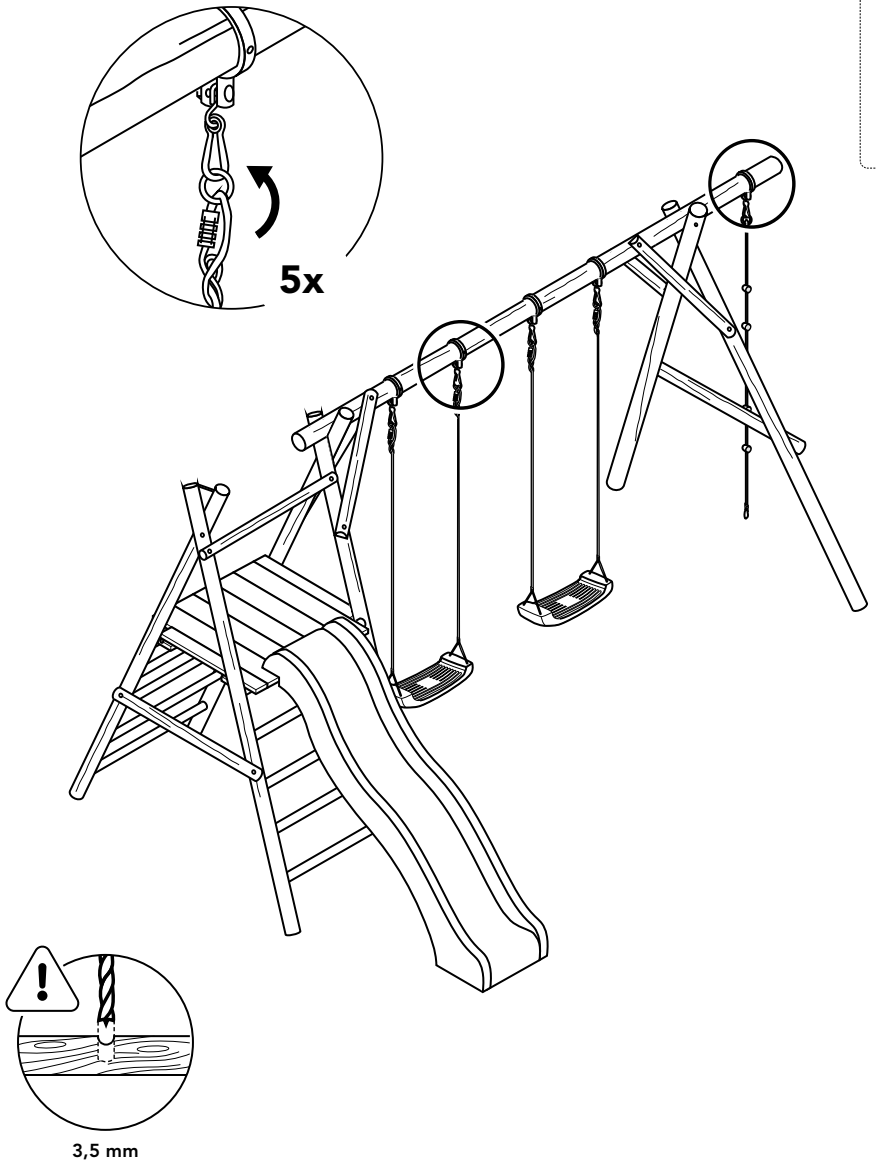

Swing King

Scan for terms and conditions

COLOR	EAN-CODE	ART. NO.
Blue	8717306719414	7880108
Red	8717306720984	7880108.RD
Yellow	8717306720960	7880108.GL
Apple green	8717306720946	7880108.AG
Green	8717306720977	7880108.GR
Turquoise	8717306720991	7880108.TB
Violet	8717306721004	7880108.VI

+31(0)318 692 221
www.swingking.nl

Swing King IS A BRAND OF:

HAPRO INTERNATIONAL

8 717306 719414 >

©2022 SWINGKING ART. NR. 7880108